A DESIGN GUIDE TO IC SOCKETS AND INTERCONNECT COMPONENTS

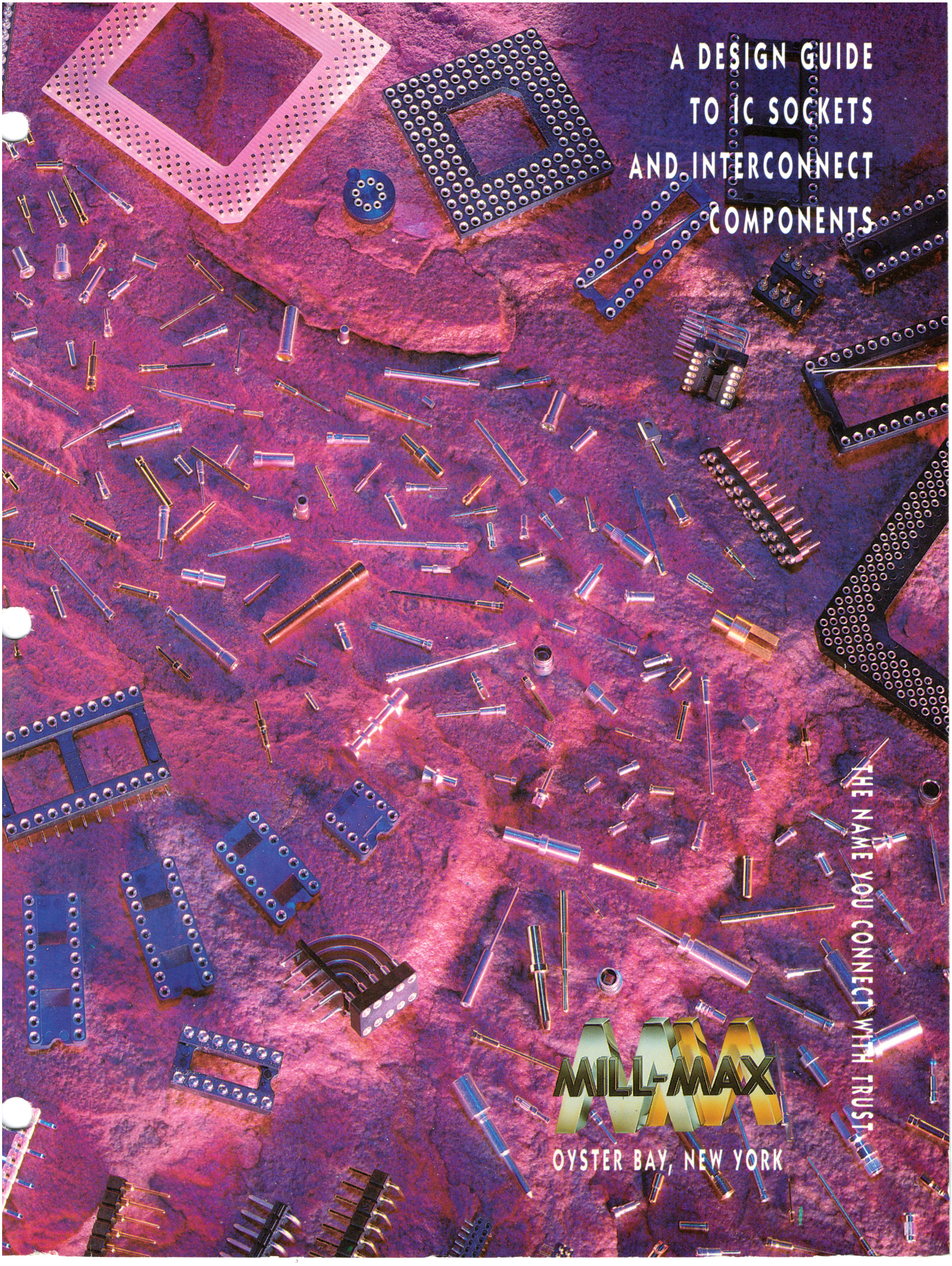

THE NAME YOU CONNECT WITH TRUST.

MILL-MAX

OYSTER BAY, NEW YORK

MILL-MAX, TOTAL CONTROL FROM RAW MATERIALS TO FINISHED PRODUCT.

This philosophy is a long standing tradition at Mill-Max which has served to make us North America's leading manufacturer of precision-machined interconnects.

Mill-Max's state-of-the-art manufacturing facility and in particular, its dedication to specialized screw machine technology can produce over 100 million interconnect components, IC sockets and connectors every week; all the way from raw materials to finished product; all under the same roof.

At Mill-Max, we believe a company's credibility is only as high as its internal standards. Total control of the manufacturing process is the only way we can guarantee world class quality, on-time delivery, and competitive prices.

Today, Mill-Max remains firmly committed to be a leader in our field: a name you can connect with trust. Now, and in the future.

◆ **Innovative products** are the result of knowledgeable engineers combining their talents with the latest design tools to utilize our highly flexible technology.

The finest raw materials are stockpiled by Mill-Max to ensure that immediate and long term delivery dates are met. All incoming materials are tested for purity, quality and performance. Mill-Max products are made with brass and copper alloys; electroplated with tin, nickel, gold and copper; and utilize high performance thermoplastics and glass-epoxy laminates.

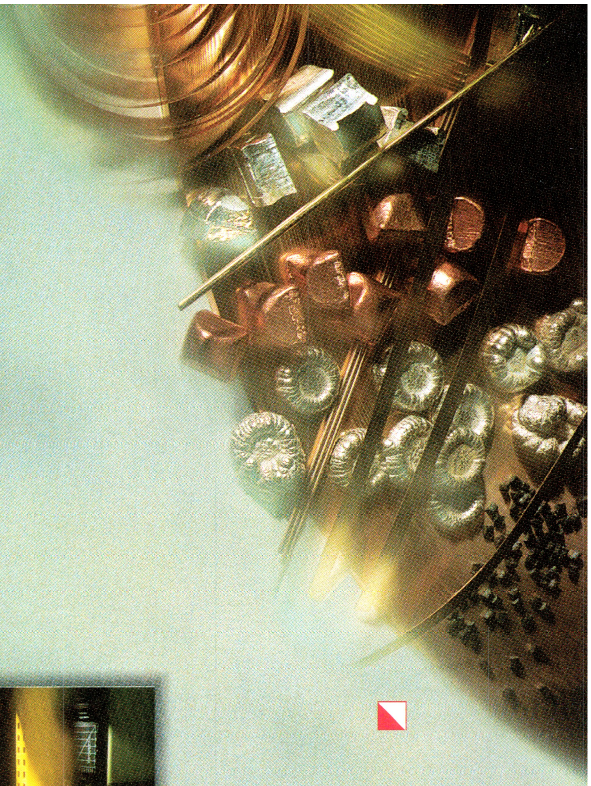

Injection molding of engineered thermoplastics using the latest computer controlled injection molding equipment. We build our own precise and versatile modular tooling, especially valuable in fast delivery of custom products.

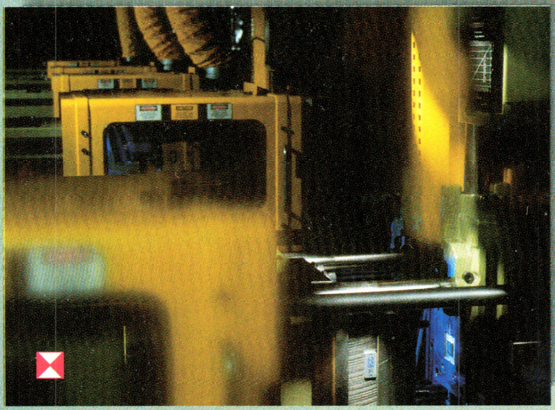

Drilling and routing of glass-epoxy laminates is done on automated equipment, enabling us to offer extremely fast turnaround on insulators used for prototype designs and unusual configurations.

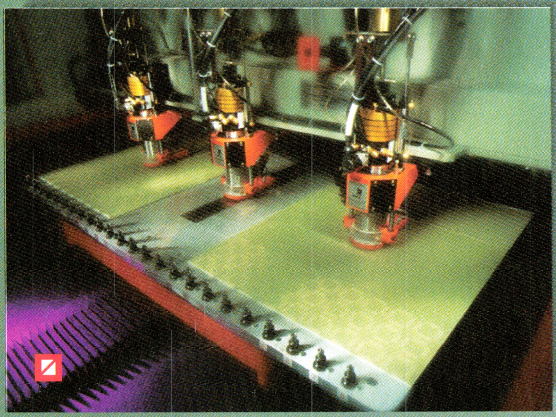

Precision stamping of the highly reliable Mill-Max "multi-finger" contact is a tightly controlled operation. Beryllium copper is stamped and formed with progressive dies, then heat treated to achieve ultimate spring properties.

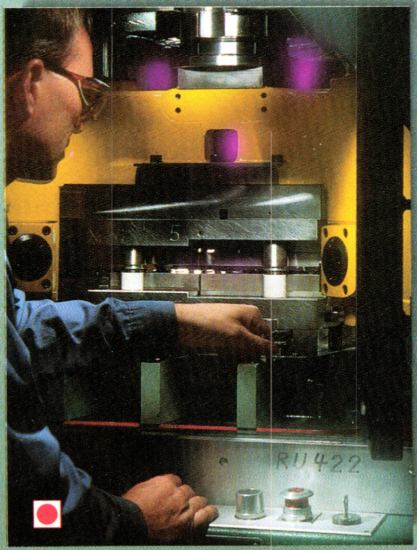

ALL MANUFACTURING IS INTERCONNECTED, ASSURING WORLD CLASS QUALITY

◆ **High speed turning** is the cornerstone of Mill-Max's operation. We use proprietary equipment capable of operating at speeds 10 times faster than ordinary machines. Since minimal tooling and no dies are required, our customers benefit from swift turnaround on custom parts as well as economical high volume production.

● **A large inventory** of raw materials, work in process and finished product assures that your delivery schedules will be met. If a customer's requirements change, or a last minute product modification is made, Mill-Max is prepared to respond.

◪ **Secondary machining** is an efficient off-line process used to generate a variety of shapes. Operations include squaring, milling, slotting, as well as cross and back drilling.

⧗ **Electroplating** plays an integral part in the manufacturing of high reliability interconnect components. Mill-Max has set the standard for excellence through the use of a unique "basket" plating process which ensures quality and uniformity. We offer a variety of tin and gold plating options, providing the optimum balance between cost and required service life.

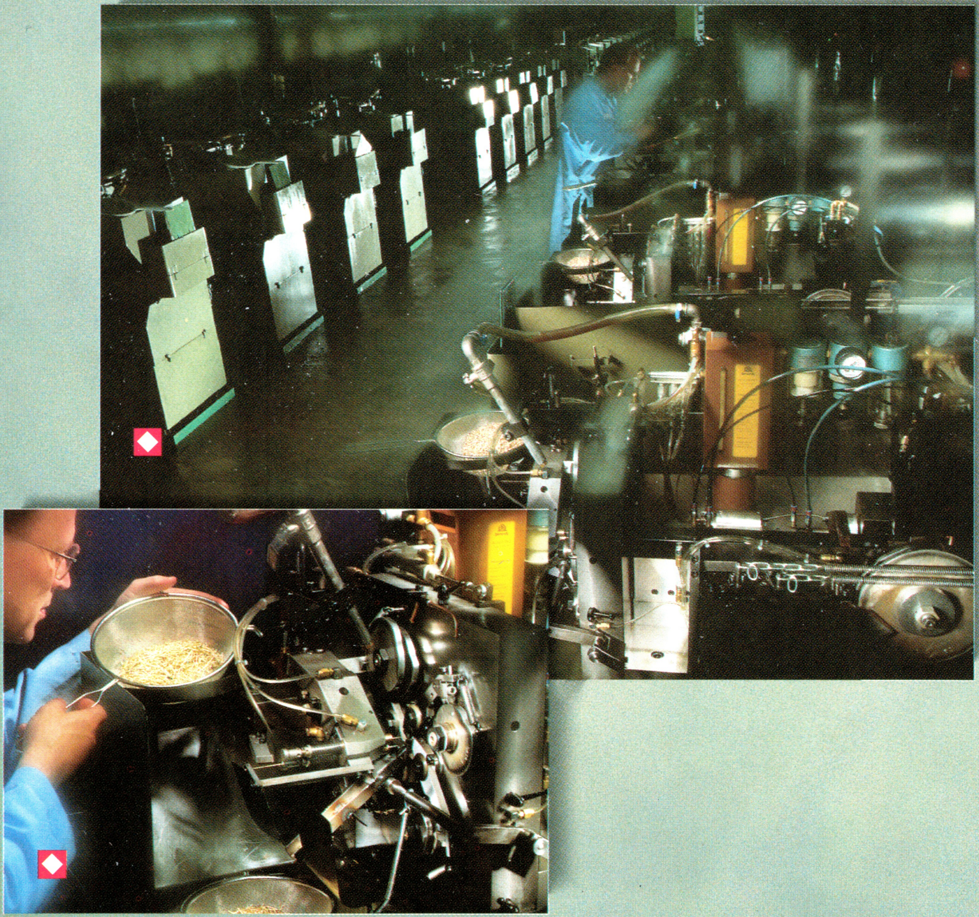

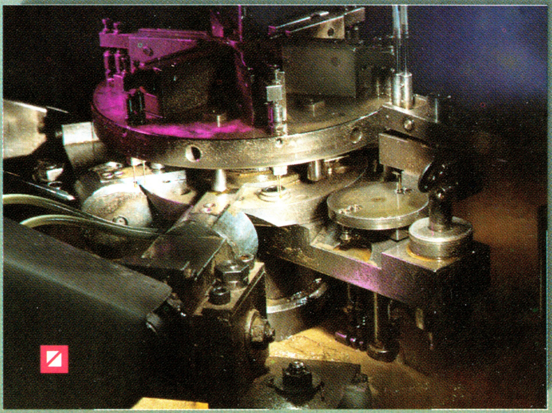

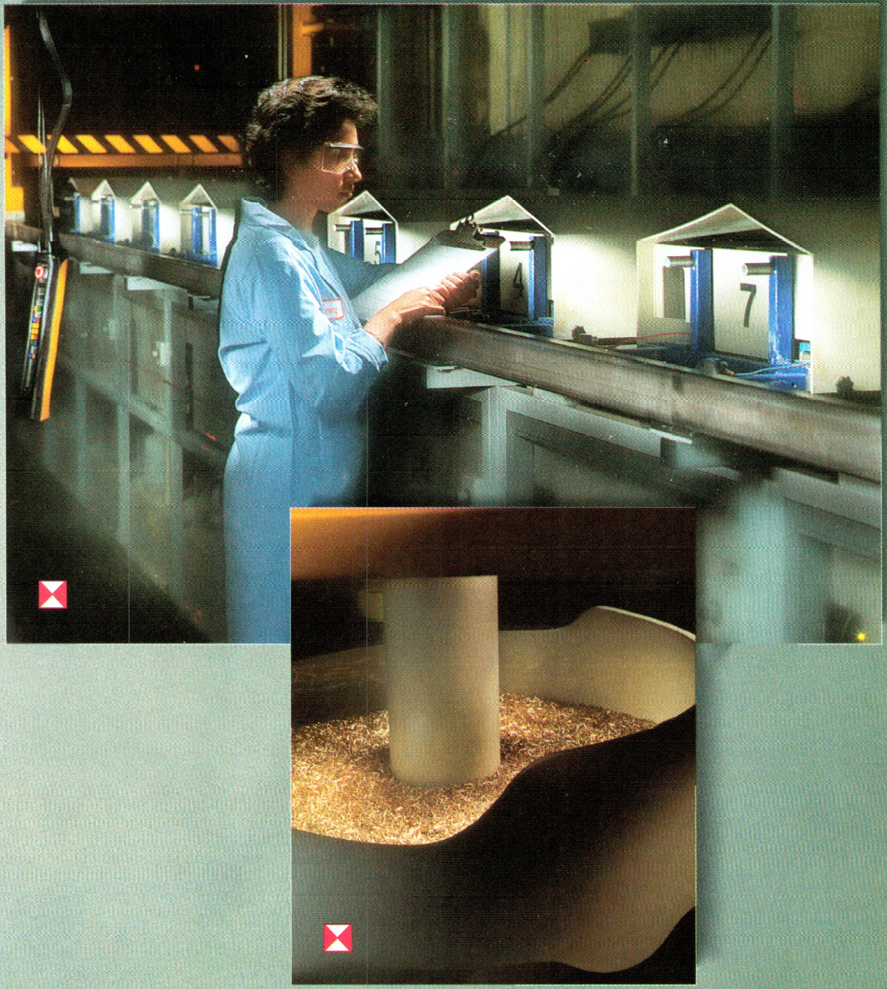

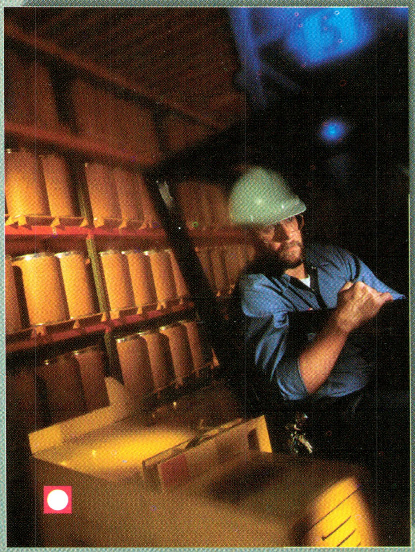

● **Contact assembly** is where our world famous "multi-finger" contact is combined with a precision machined shell. This process is capable of assembling parts at high speed. Our proprietary contact assembly equipment has built-in safeguards that automatically verify product integrity.

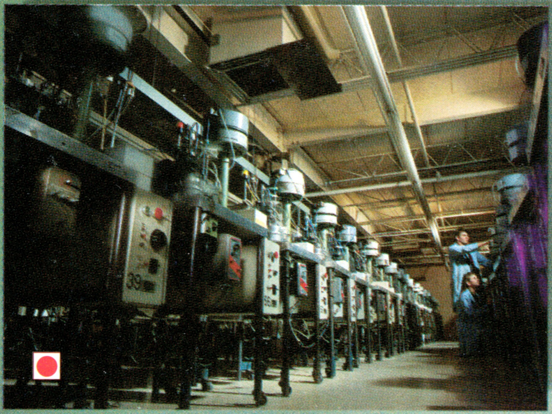

◩ **Socket assembly** is the final stage of manufacturing where the loose pins are united with the plastic insulator. A wide variety of DIP, SIP and PGA socket and interconnect configurations are possible.

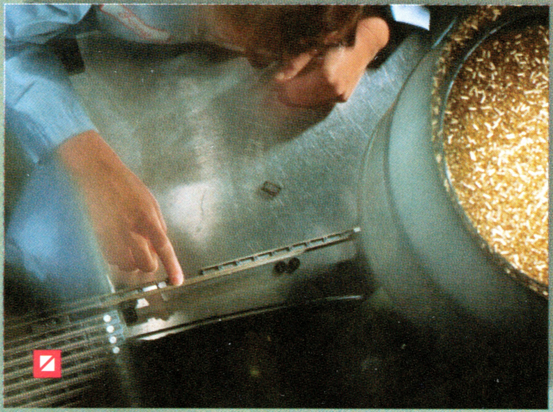

◆ **Packaging and shipping** gets careful attention at Mill-Max, making sure that the right product goes to the right place. That's why Mill-Max utilizes bar code scanning for accurate inventory control. And we only use the most durable packaging to make sure that our products arrive in perfect condition.

MILL-MAX MFG. CORP.
Oyster Bay, NY 11771
(516) 922-6000
1324
P/N: P 110-91-628-41-001000
# OF TUBES: 56
QTY: 784
PCS
DECODE
SCAN
LS 2000 II

From order entry to shipping product, Mill-Max is focused on the total satisfaction of our customers. It's this commitment to excellence that truly makes Mill-Max the name you connect with trust.

MILL-MAX,
THE NAME YOU CONNECT
WITH TRUST.

- ☐ Largest inventory of machined interconnect components in North America
- ☐ Unique capabilities to provide emergency product assistance
- ☐ Flexible enough to respond to individual needs
- ☐ Expert custom design support
- ☐ Samples shipped within 24-hours
- ☐ 1-hour order confirmation

SEE OUR NEW PRODUCTS AND SERVICES ON THE INSIDE BACK COVER AND FOR THE LATEST INFORMATION, VISIT OUR WEB SITE AT:

http://www.mill-max.com

MILL-MAX®

OYSTER BAY, NEW YORK

THE NAME YOU CONNECT WITH TRUST

TABLE OF CONTENTS

General Technical Specifications................................page 4
Glossary of Terms..pages 5 - 6
Insulator Specifications...pages 7 - 9

DIP SOCKETS

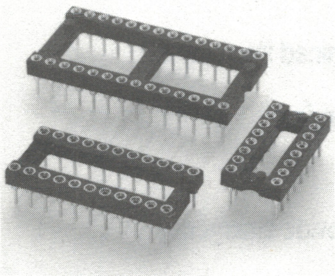

DIP Sockets, Carriers & Headers

Quick Selector Guide...page 10
Standard, Open & Closed Frame, Low Profile, Solderless, Capacitor, Surface Mount, Wrapost, Right Angle, Carrier Type......................................pages 11 - 36

SIP SOCKETS

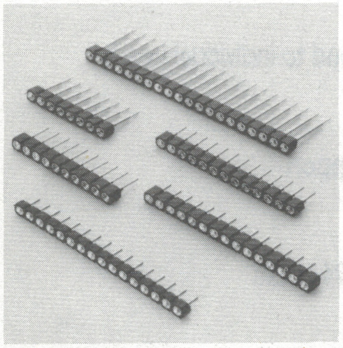

SIP Sockets, Carriers & Headers

Quick Selector Guide...page 37
Standard, Single & Double Row, Solderless, Carrier Type...pages 38 - 45

INTERCONNECTS

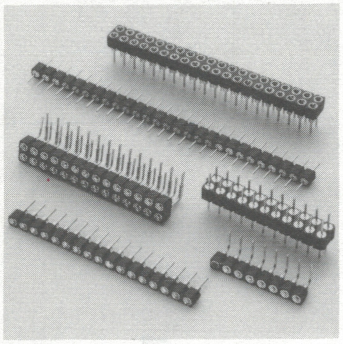

Interconnects

Quick Selector Guide...page 46
Single & Dual Row, .100” Grid, .050” Grid, 2mm Grid Solderless Press-Fit, .018” dia. Pin, .025” Square Pin, .030” dia. Pin, .040” dia. Pin, Low Profile.............pages 47 - 59

SPECIALTY

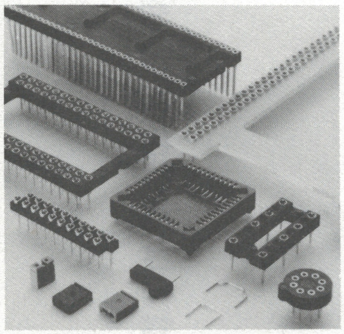

Specialty Products

Relay, Quad, Zig-Zag, Turbocache, Transistor, Jumpers, Shrink DIP, Solderless, PLCC................pages 60 - 64

NOTE

- All dimensions in this catalog are in inches unless otherwise stated.
- All rights reserved. Copyright Mill-Max Mfg. Corp.,1997
- In the interest of improved design and performance, Mill-Max reserves the right to make changes in its specifications without prior notice.

TABLE OF CONTENTS

PIN GRID ARRAY

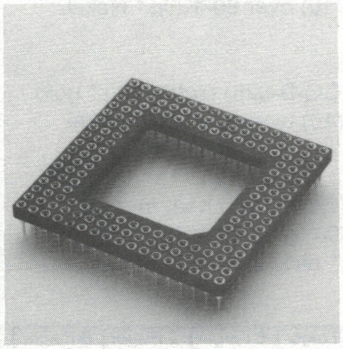

PGA Sockets & Headers

Technical Specifications....................page 65
Standard, Low Profile, Wrapost, Carrier Type, Interstitial Grid, Heat Sink, Pin Headers, Surface Mount....................pages 66 - 72
PGA Custom Design Worksheet....................page 73
PGA Footprints....................pages 74 - 78

LOOSE PIN INTERCONNECTS

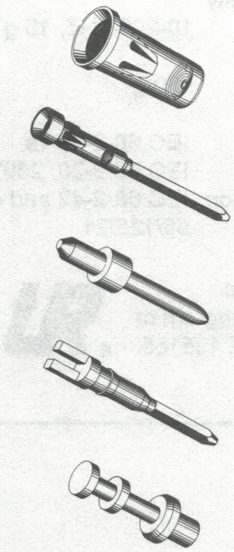

Pin Selector Guide....................page 79
Pin Specifications....................pages 80 - 81

Pin Receptacles....................pages 82 - 114

Wrapost Receptacles....................pages 115-118

Printed Circuit Pins....................pages 119-131

Wrapost Terminals....................pages 132-135

Solder Terminals....................pages 136-152

General Contact Information....................pages 153-154
Contact Data and Graphs....................pages 155-164
Custom Pin Design Worksheet....................page 165
Socket/ Interconnect Index....................pages 166-167
Loose Pin Index....................page 168

GENERAL TECHNICAL SPECIFICATIONS

MATERIALS

INSULATOR BODY:
Standard material is glass filled thermoplastic polyester (PBT), self-extinguishing, rated UL94V-0.

Heat deflection temperature (HDT @ 264 psi)= 204° C (400° F) Color black. Resistant to detergents, mineral acids, solvents, greases and oils (short time).

Surface mount and pin grid array socket insulators are molded from high temperature PCT polyester.
HDT @ 264 psi= 254° C (490° F). This material is suitable for all forms of soldering including infra-red reflow and vapor-phase.

Products using standard open frame DIP insulators may also be ordered with high temperature PCT polyester, see ordering information on page 7.

FR-4 Epoxy is a thermoset material used in custom insulators and in high temperature applications. It is especially useful because of its low Temperature Coefficient of Expansion (TCE). See chart below.

TCE for molded insulator	30 ppm/ ° C
TCE for 4-Layer PCB	13 ppm/ ° C
TCE for unclad epoxy	12 ppm/ ° C

ELECTRICAL DATA:

- Rated current: 1A
- Rated voltage: 100 VRMS/150 VDC
- Contact resistance: 10 mΩ max.
- Insulation resistance: 10,000 MΩ min.
- Dielectric strength: 1000 VRMS
  (Min. 700 VRMS for series 117 Shrink DIP)
- Air and creepage distance: .024" min.
  (.012 for series 117 Shrink DIP)
- Capacitance: 0.3 pF max.

RECEPTACLE (SLEEVE):
Precision-machined brass (QQ-B-626) plated 10µ “ gold or 200µ “ tin-lead (SnPb 90/10) over 80-120µ “ nickel.

PIN:
Precision-machined brass (QQ-B-626) plated 10µ “ gold or 200µ “ tin-lead (SnPb 90/10) over 80-120µ “ nickel.

CONTACT (CLIP):
Stamped beryllium-copper (QQ-C-533) heat treated, plated gold flash, 10µ “ or 30µ “gold, or 200µ “ tin-lead (SnPb 90/10) over 80-120µ “ nickel.

	4 Finger Standard M-M #30	4 Finger Standard M-M #12	3 Finger Standard M-M #11	6 Finger low force M-M #32	6 Finger ultra low M-M #35	6 Finger ultra lite M-M #43
Insertion force typical values	150 gm	300 gm	60 gm	60 gm	30 gm	15 gm
Extraction force typical values	75 gm	150 gm	30 gm	30 gm	15 gm	8 gm

Mechanical life: 100 cycles min

ENVIRONMENT DATA:

- Operating temperature range: -55/+125 °C
- Vibration (No electrical discontinuity greater than 1µs): 10-2000 HZ, 15 g
- Shock (No electrical discontinuity greater than 1µs): 150 g

- Solderability: IEC 68-2-20 Ta
- Resistance to soldering heat: IEC 68-2-20, 260° C, 5s
- Resistance to atmospheric corrosion: IEC 68-2-42 and 43
- Climactic category (IEC): 55/125/21

Mill-Max series 110, 510 and 800 are recognized under the Component Program of Underwriters Laboratories Inc. File E 135165.

TECHNICAL SPECIFICATIONS FOR PLCC SOCKETS

MATERIALS:

- Insulator: Glass filled thermoplastic, self-extinguishing rated, UL94V-0, color black.
- Contact: Plated copper alloy overall nickel underplating, tin/lead finish.

MECHANICAL DATA:

- Contact pressure (per contact): 150 grams min.
- Mechanical data (cycles): 50 cycles min.

ELECTRICAL DATA:

- Rated current: SMD types: 1A
  Thru-hole types: 2A

- Contact resistance: 20 mΩ max.
- Insulation resistance: 5,000 MΩ min.
- Dielectric strength: 600 VRMS
- Capacitance: 2pF max.

ENVIRONMENTAL DATA:

- Operating temperature: -55/+125 °C
- Vibration (No electrical discontinuity greater than 1µs): 10-2000 HZ, 15 g
- Climactic category (IEC): 55/85/21

PLCC Extraction Tool

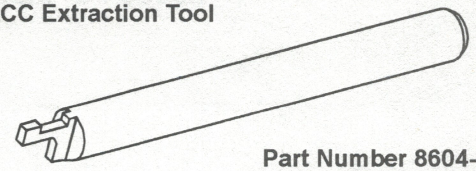

Part Number 8604-5450

GLOSSARY OF TERMS AND DEFINITIONS

Annealing - Refers to a brass pin that has been softened by heat treatment which makes the pin easier to crimp, rivet (swage) or bend.

Basket Plating - An electroplating system where the parts are processed in a vibrating basket which ensures uniform plating thickness and avoids damage to delicate parts.

Beryllium Copper Alloy 172 - (Per ASTM B194-92) Chemical Composition: 98.1 % Cu / 1.9% Be. Beryllium Copper Alloy 172 is well suited to stamping and forming. Unlike other materials, which sacrifice formability to achieve favorable spring characteristics, beryllium copper is easily stamped and formed. Once formed into the desired contact shape, the part is then heat treated to obtain full spring properties.

Brass Alloy 360 ½ Hard - (Per ASTM B16-85) Chemical Composition: 61.5% Cu / 35.4% Zn / 3.1% Pb. Classified as a free cutting material (excellent machinability) making it ideal for high speed turning. Other properties include excellent conductivity and solderability as well as good corrosion resistance. Brass is generally used in making receptacle shells and pins. It can be annealed (softened), but not hardened.

Carrier - An assembly consisting of an insulator with male pins onto which receptacles are loaded. This assembly is employed as a fixture during the soldering operation and is then removed leaving a P.C. board populated with individual receptacles. Female carriers that load male pins are also available for special applications.

Clip - See contact.

Closed Entry - Refers to female contacts where the front rim prevents the insertion of an oversize pin that would otherwise damage the contact.

Compliancy - Contact's ability to accept multiple insertions and extractions of a wide range of pin shapes and sizes while retaining its original configuration.

Compliant Press Fit - Method of mounting an interconnect component to a PCB where a drilled and slotted receptacle or pin is pressed into a plated-thru-hole without damaging the hole.

Constant Usage Temperature (CUT) - Constant Usage Temperature is a measure of the maximum temperature that a material may be exposed to for long periods of time, 1000 - 1500 hrs., before degradation of it's electrical and mechanical properties occurs.

Contact - Multi-finger spring insert of a receptacle which completes the electrical path between a male pin and a female receptacle. Also referred to as a clip.

Contact Rating - Current carrying capability of a contact measured in amperes with respect to temperature rise above ambient.

Contact Resistance - The electrical resistance at the point of connection determined by the contact geometry, area of contact, plating and normal force.

Electroplating - The electrodeposition of a metal coating on a conductive object.

End Stackable - The ability for connectors to be mounted end to end while maintaining grid or spacing.

FR-4 Epoxy - Woven glass cloth epoxy laminate. HDT - 177C / 350F, CUT - 140C / 284F. Classified as a thermoset, the woven fibers of these materials enable them to withstand high temperatures without being damaged. Cut from large sheets of material,

Nylon 46 - 45 % glass filled nylon, rated UL94 V-O. HDT - 285C / 545F, CUT - 149C / 300F. Nylons, or polyamides, are classified as thermoplastics. Nylon 46 offers superior heat resistance, good electrical properties and excellent toughness in thin walls, which are desirable characteristics for connector insulators. Its' superior strength in thin walls enables the press fitting of pins in close proximity to each other without cracking or warping the material, making it ideal for molding 2mm and .050" grid insulators. Nylon 46 is suitable for high temperature applications including vapor phase, infra-red reflow and wave soldering operations. The insulator is then machined on a high speed drill/router, the same way as printed circuit boards are fabricated. Applications: Mill-Max uses FR-4 epoxy to quickly manufacture custom connectors. Configurations include standard and non- standard connector spacings (pin to pin and row to row), selected high density PGAs, low profile and surface mount sockets and headers, surface mount adapters and custom shaped connector bodies. Also used where thermal expansion of PCB is critical. See page 4 under "Materials". FR-4 Epoxy is suitable for hand, wave, vapor phase and infra-red reflow soldering.

Flash Plating - A very thin plating, usually less than 10 micro inches, only enough metal to uniformly cover the surface of the base metal.

Floating Contact - In surface mount sockets, a receptacle designed to move up and down freely in an insulator to compensate for unevenly dispensed solder paste.

Free Machining Alloy - An alloy which is easy to machine, e.g. brass alloy 360.

Fretting - A form of corrosion caused by vibration.

Gas Tight Connection - An electrical connection of sufficient pressure to prevent the intrusion of a corrosive atmosphere into the contact area.

Heat Deflection Temperature (HDT) - An industry recognized test for comparing the short term effects of high temperature on plastics.

Heat Treating - The process of using specific heating and cooling cycles to alter the mechanical properties of an alloy. Generally, heat treating can harden or soften a metal depending on the material, the parameters used and the desired physical property.

Hex Press Fit - A method of press fitting either a pin or receptacle, using a hexagonal cross section, into a plated-

thru-hole without causing damage to the hole and still maintaining a gas tight seal.
High Speed Turning - See "Precision machined".

Injection Molding - A method of molding plastics by first heating granular plastic to its molten state and injecting it into the mold cavity where the plastic solidifies and is then ejected from the cavity.
Insertion Force - The force required to insert a male lead into a female socket.

Knurl - A vertical serration machined around the diameter of an interconnect pin providing a retention feature for press-fitting in a P.C. board or insulator and also prevents rotation of the pin.

LCP (Liquid Crystal Polymer) - 30 % glass filled copolymer, rated UL94 V-O. HDT - 243C / 470F, CUT - 240C / 465F. Classified as a thermoplastic, LCP is a hard, rigid material which exhibits outstanding strength at high temperatures and exceptional strength and toughness in thin walls. Applications: LCP is used as an insulator material for tight grid (.050", 2mm) connectors and extremely high temperature requirements.

Machined - See "Precision machined".
Migration - For a brass part plated with tin or gold, the migration of zinc from brass to the surface of the plating. This becomes zinc oxide and renders the part unsolderable. Zinc migration is prevented by using a copper or nickel underplate as a barrier.

PBT (Polybutylene Terephthalate) - 30 % glass filled polyester, rated UL94 V-O. HDT- 204C / 400F, CUT - 130C / 266F. PBT is a thermoplastic polyester with high dielectric strength, low moisture absorption, good chemical resistance and available in flame retardant grades. These properties make PBT well suited for use as an insulator material for electronic connectors. Applications include open and closed frame DIPs, single and dual row SIPs, quad, zig-zag, transistor, shrink DIP and others. PBT can withstand most wave soldering operation temperatures.
PCB - Printed Circuit Board.
PCT (Polycyclohexane Terephthalate) - 30 % glass filled polyester, rated UL94 V-O. HDT - 243C/470F, CUT - 130C/266F. PCT, a thermoplastic polyester, exhibits the same characteristics as PBT and is rated for higher temperatures. PCT is available as an option on dip and sip insulators for higher temperature operations. All PGA and surface mount products are molded from PCT and are suitable for infra-red, vapor phase and wave soldering.
Phosphor Bronze Alloy 544 - (Per ASTM B139-90) Chemical Composition: 88% Cu / 4% Sn / 4% Zn / 4% Pb. Phosphor Bronze 544 is classified as a free cutting material which lends itself well to high speed turning. Phosphor bronze is used for selected terminals and receptacle shells where extra strength is needed. Along with excellent solderability, phosphor bronze is readily platable. Other characteristics include good conductivity and almost no corrosion related to stress. It cannot be hardened.
Plating - A process in which metals (e.g. gold, tin-lead, nickel, silver) are electrically deposited onto a base metal in very thin and precise thicknesses.
Plated Thru Hole - A hole in a printed circuit board which has metallic walls connected to conductors on the surface or inside the board, and to which the component lead is inserted and soldered.
Precision Machined - Manufacturing process whereby a rapidly turning solid metal rod is shaped and cut to precise tolerances.

Receptacle - Female contact consisting of an outer shell and inner spring contact (clip) designed for multiple mating/unmating cycles with a male pin or component lead.

Screw Machined - See Precision Machined.
Secondary Machining - A process in which holes, slots, flats, squares or other special features may be machined onto a pin or receptacle after the basic shape of the part has been turned on a high speed lathe.
Shrink DIP Package - An IC which has a pin spacing of .070" on centers.

Standoff - A protrusion at the bottom of the connector used to raise it off the PCB to aid in solder fillet formation, board inspection, flux removal and cleaning.
Swage Mount - A type of mounting commonly used with solder terminals and printed circuit pins where one end of the terminal is flared out (riveted) securing it to the PCB.

Thermal Coefficient of Expansion(TCE) - Expansion of material caused by an increase in temperature.
Thermoset - Type of plastic which is heat cured into a permanent shape, and due to chemical reaction, cannot be remelted.
Thermoplastics - Type of plastic which is molded under heat and pressure and can be remelted and reused many times.
Top Plate - Final surface plating over base metal and underplating.

Underplate - Plating between the base metal and the top plating.

Withdrawal Force - The force required to remove a lead from a contact.
Wrapost (Terminal or Receptacle) - The length of square cross section of certain pins and receptacles which is used for making electrical connections via wire wrapping. Wire wrapping is a process in which wire is wrapped around the post to form a gas-tight connection without soldering.

DUAL-IN-LINE INSULATORS
Standard Open Frame

210
Fig.1

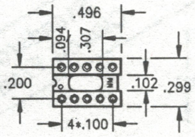
.496
.094
.307
.200
.102
.299
4*.100

304
Fig.2

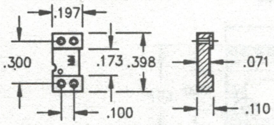
.197
.300
.173
.398
.100
.071
.110

306
Fig.3

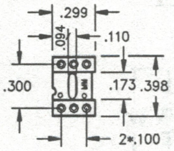
.299
.094
.110
.300
.173
.398
2*.100

308
Fig.4

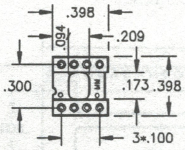
.398
.094
.209
.300
.173
.398
3*.100

310
Fig.5

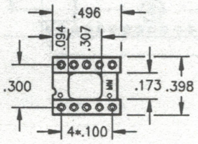
.496
.094
.307
.300
.173
.398
4*.100

314
Fig.6

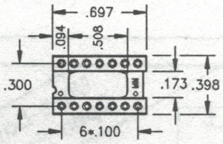
.697
.094
.508
.300
.173
.398
6*.100

316
Fig.7

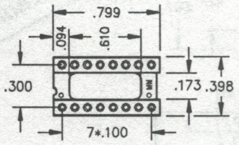
.799
.094
.610
.300
.173
.398
7*.100

318
Fig.8

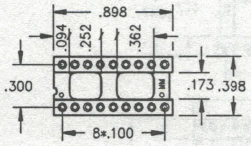
.898
.094
.252
.362
.300
.173
.398
8*.100

320
Fig.9

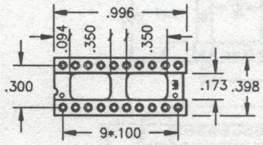
.996
.094
.350
.350
.300
.173
.398
9*.100

322
Fig.10

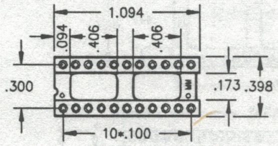
1.094
.094
.406
.406
.300
.173
.398
10*.100

324
Fig.11

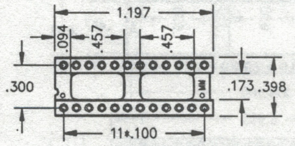
1.197
.094
.457
.457
.300
.173
.398
11*.100

328
Fig.12

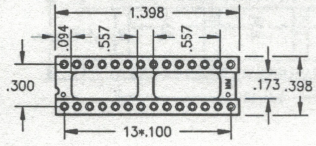
1.398
.094
.557
.557
.300
.173
.398
13*.100

420
Fig.13

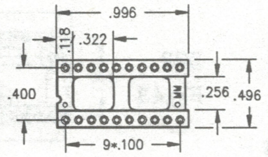
.996
.118
.322
.400
.256
.496
9*.100

422
Fig.14

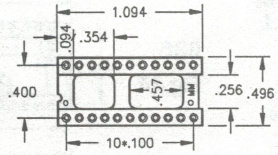
1.094
.094
.354
.457
.400
.256
.496
10*.100

424
Fig.15

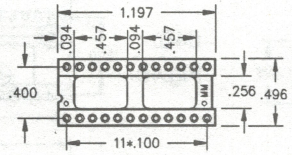
1.197
.094
.457
.094
.457
.400
.256
.496
11*.100

428
Fig.16

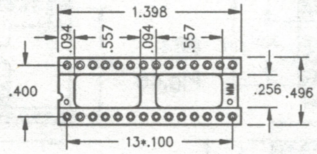
1.398
.094
.557
.094
.557
.400
.256
.496
13*.100

432
Fig.17

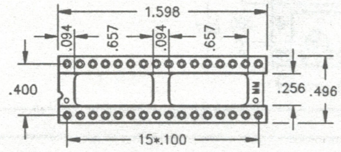
1.598
.094
.657
.094
.657
.400
.256
.496
15*.100

624
Fig.18

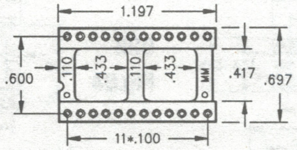
1.197
.600
.110
.433
.110
.433
.417
.697
11*.100

628
Fig.19

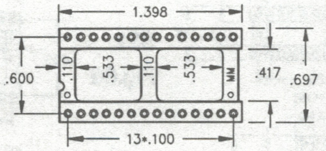
1.398
.600
.110
.533
.110
.533
.417
.697
13*.100

632
Fig.20

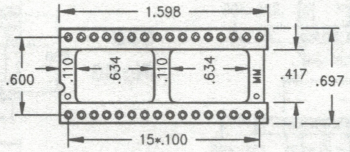
1.598
.600
.110
.634
.110
.634
.417
.697
15*.100

636
Fig.21

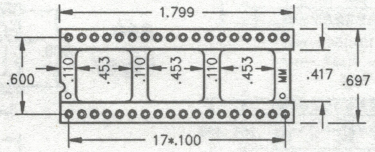
1.799
.600
.110
.453
.110
.453
.110
.453
.417
.697
17*.100

640
Fig.22

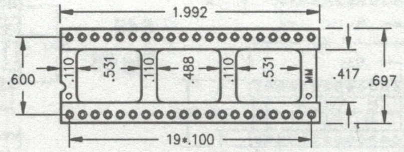
1.992
.600
.110
.531
.110
.488
.110
.531
.417
.697
19*.100

642
Fig.23

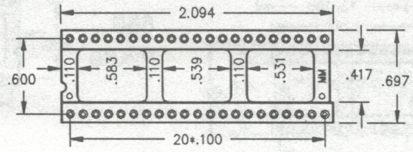
2.094
.600
.110
.583
.110
.539
.110
.531
.417
.697
20*.100

648
Fig.24

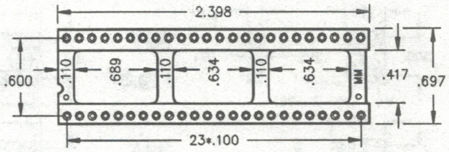
2.398
.600
.110
.689
.110
.634
.110
.634
.417
.697
23*.100

650
Fig.25

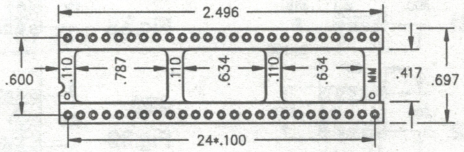
2.496
.600
.110
.787
.110
.634
.110
.634
.417
.697
24*.100

652
Fig.26

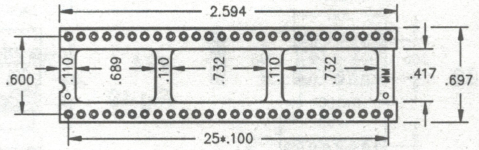
2.594
.600
.110
.689
.110
.732
.110
.732
.417
.697
25*.100

950
Fig.27

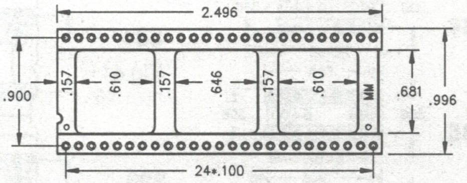
2.496
.900
.157
.610
.157
.646
.157
.610
.681
.996
24*.100

952
Fig.28

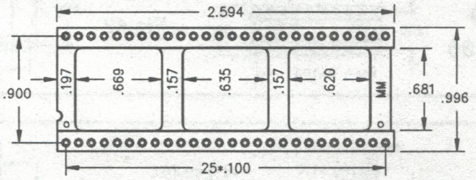
2.594
.900
.197
.669
.157
.635
.157
.620
.681
.996
25*.100

964
Fig.29

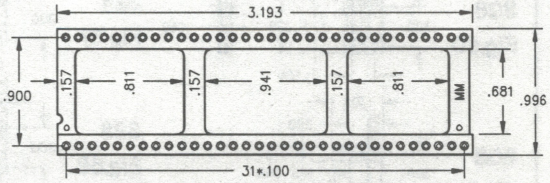
3.193
.900
.157
.811
.157
.941
.157
.811
.681
.996
31*.100

Open frame insulators 318, 320, 322, 324, 624, 628, 632 and 640 are available on special request without center bars. Order number same as corresponding socket or pin header but with suffix 050 added.

Example:
110-93-628-41-001 standard.
110-93-628-41-001050 without center bar.

Open frame insulators 210, 306, 308, 310, 314, 316, 318, 320, 322, 324, 328, 422, 424, 624, 628, 632, 640, 648 and 964 are also available in high temp. PCT polyester. This plastic has a heat deflection temperature of 254°C(490°F) and is suitable for infra-red reflow and vapor-phase soldering as well as conventional wave or hand soldering. Order number same as corresponding socket or pin header but with suffix 100 added.

Example:
110-93-628-41-001 for regular PBT polyester becomes 110-93-628-41-001100 for high temp. PCT polyester.

Standard, Open Frame

DUAL-IN-LINE INSULATORS

Standard, Closed Frame
Ultra Low Profile, Open Frame

Standard, Closed Frame

306
Fig.30

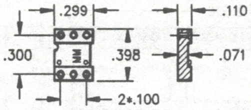

.299
.110
.300
.398
.071
2*.100

308
Fig.31

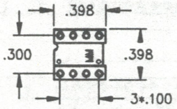

.398
.300
.398
3*.100

310
Fig.32

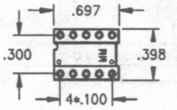

.697
.300
.398
4*.100

314
Fig.33

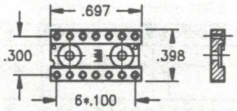

.697
.300
.398
6*.100

316
Fig.34

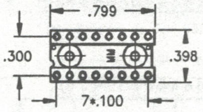

.799
.300
.398
7*.100

318
Fig.35

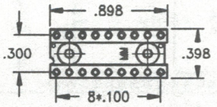

.898
.300
.398
8*.100

320
Fig.36

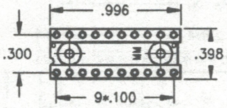

.996
.300
.398
9*.100

322
Fig.37

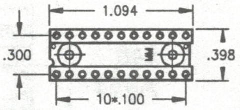

1.094
.300
.398
10*.100

324
Fig.38

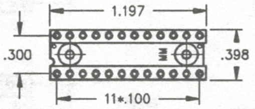

1.197
.300
.398
11*.100

422
Fig.39

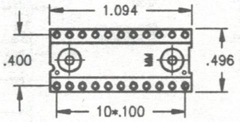

1.094
.400
.496
10*.100

424
Fig.40

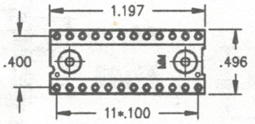

1.197
.400
.496
11*.100

624
Fig.41

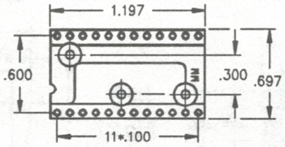

1.197
.600
.300
.697
11*.100

628
Fig.42

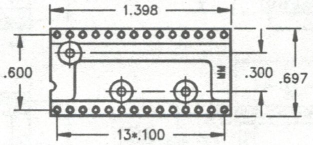

1.398
.600
.300
.697
13*.100

632
Fig.43

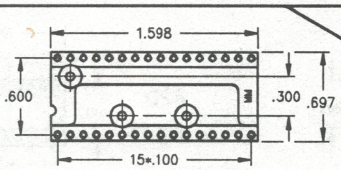

1.598
.600
.300
.697
15*.100

636
Fig.44

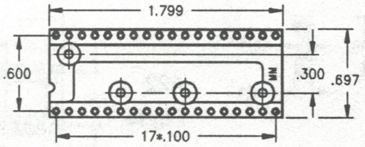

1.799
.600
.300
.697
17*.100

640
Fig.45

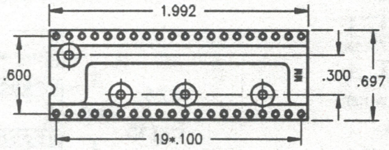

1.992
.600
.300
.697
19*.100

964
Fig.46

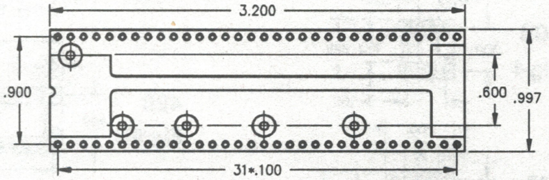

3.200
.900
.600
.997
31*.100

Ultra Low, Open Frame

306
Fig.50

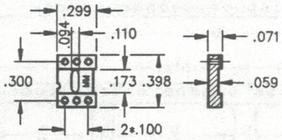

.299
.094
.110
.071
.300
.173
.398
.059
2*.100

308
Fig.51

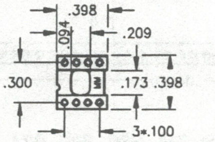

.398
.094
.209
.300
.173
.398
3*.100

314
Fig.52

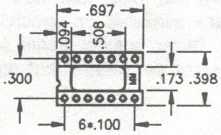

.697
.094
.508
.300
.173
.398
6*.100

316
Fig.53

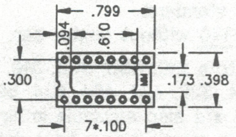

.799
.094
.610
.300
.173
.398
7*.100

318
Fig.54

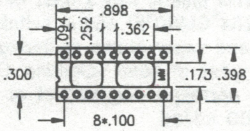

.898
.094
.252
.362
.300
.173
.398
8*.100

320
Fig.55

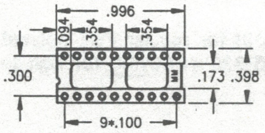

.996
.094
.354
.354
.300
.173
.398
9*.100

322
Fig.56

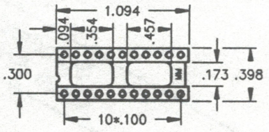

1.094
.094
.354
.457
.300
.173
.398
10*.100

324
Fig.57

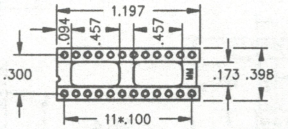

1.197
.094
.457
.457
.300
.173
.398
11*.100

328
Fig.58

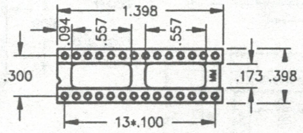

1.398
.094
.557
.557
.300
.173
.398
13*.100

420
Fig.59

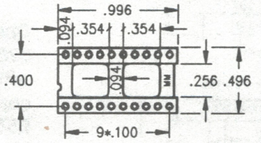

.996
.094
.354
.354
.094
.400
.256
.496
9*.100

422
Fig.60

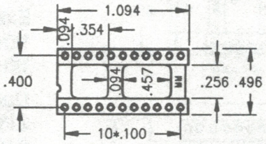

1.094
.094
.354
.094
.457
.400
.256
.496
10*.100

424
Fig.61

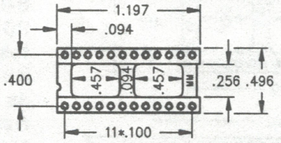

1.197
.094
.457
.094
.457
.400
.256
.496
11*.100

428
Fig.62

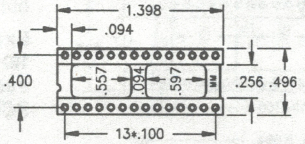

1.398
.094
.557
.094
.597
.400
.256
.496
13*.100

624
Fig.63

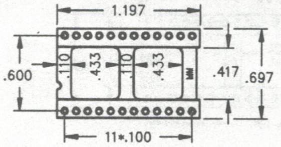

1.197
.110
.433
.433
.600
.417
.697
11*.100

628
Fig.64

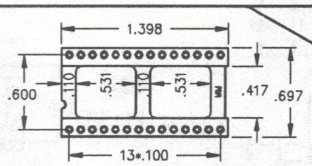

1.398
.110
.531
.110
.531
.600
.417
.697
13*.100

632
Fig.65

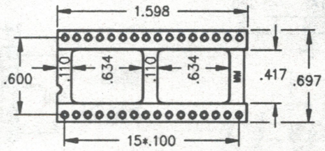

1.598
.110
.634
.110
.634
.600
.417
.697
15*.100

636
Fig.66

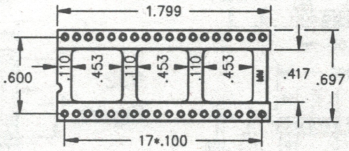

1.799
.110
.453
.110
.453
.110
.453
.600
.417
.697
17*.100

640
Fig.67

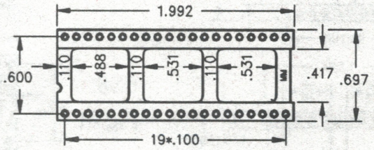

1.992
.110
.488
.110
.531
.110
.531
.600
.417
.697
19*.100

648
Fig.68

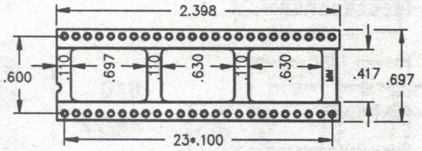

2.398
.110
.697
.110
.630
.110
.630
.600
.417
.697
23*.100

650
Fig.69

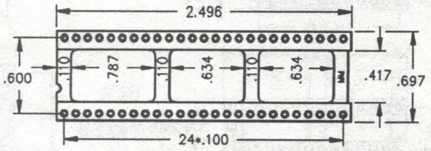

2.496
.110
.787
.110
.634
.634
.600
.417
.697
24*.100

DUAL-IN-LINE INSULATORS

Shrink DIP, Open and Closed Frame
Automatic Insertion, Open Frame

316
Fig.70

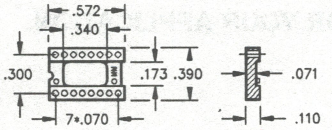
.572
.340
.300
.173
.390
.071
.110
7*.070

428
Fig.71

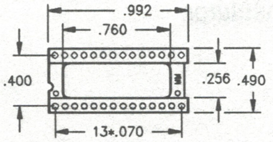
.992
.760
.400
.256
.490
13*.070

430
Fig.72

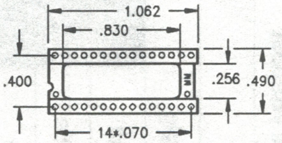
1.062
.830
.400
.256
.490
14*.070

448
Fig.73

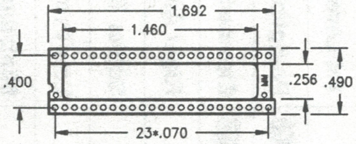
1.692
1.460
.400
.256
.490
23*.070

620
Fig.74

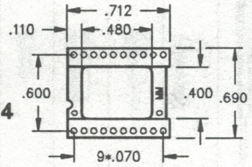
.110
.712
.480
.600
.400
.690
9*.070

628
Fig.75

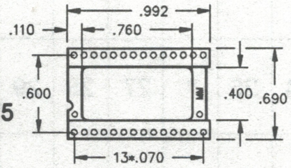
.110
.992
.760
.600
.400
.690
13*.070

640
Fig.76

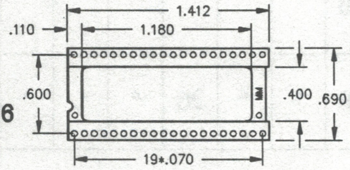
.110
1.412
1.180
.600
.400
.690
19*.070

642
Fig.77

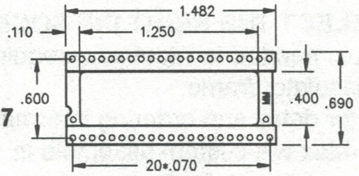
.110
1.482
1.250
.600
.400
.690
20*.070

648
Fig.78

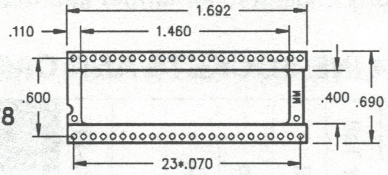
.110
1.692
1.460
.600
.400
.690
23*.070

652
Fig.79

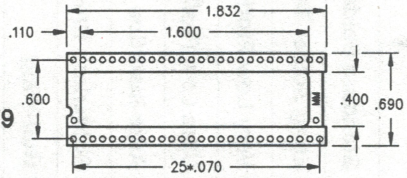
.110
1.832
1.600
.600
.400
.690
25*.070

656
Fig.80

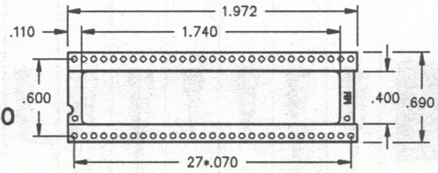
.110
1.972
1.740
.600
.400
.690
27*.070

664
Fig.81

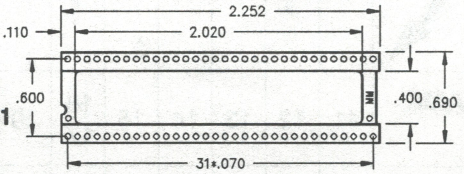
.110
2.252
2.020
.600
.400
.690
31*.070

668
Fig.82

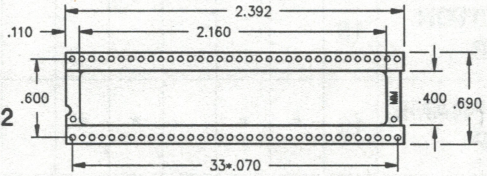
.110
2.392
2.160
.600
.400
.690
33*.070

764
Fig.83

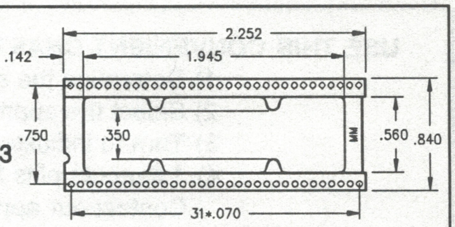
.142
2.252
1.945
.750
.350
.560
.840
31*.070

764
Fig.84

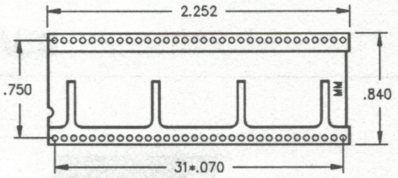
2.252
.750
.840
31*.070

Shrink DIP
Open and Closed Frame

306
Fig.100

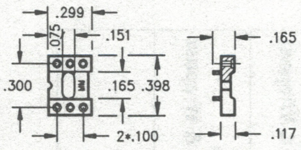
.299
.075
.151
.165
.300
.165
.398
.117
2*.100

308
Fig.101

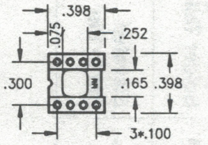
.398
.075
.252
.300
.165
.398
3*.100

314
Fig.102

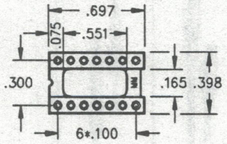
.697
.075
.551
.300
.165
.398
6*.100

316
Fig.103

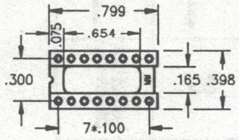
.799
.075
.654
.300
.165
.398
7*.100

318
Fig.104

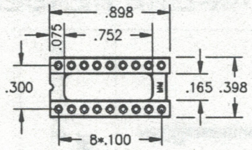
.898
.075
.752
.300
.165
.398
8*.100

320
Fig.105

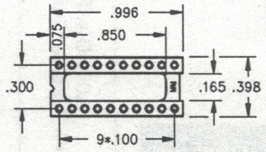
.996
.075
.850
.300
.165
.398
9*.100

324
Fig.106

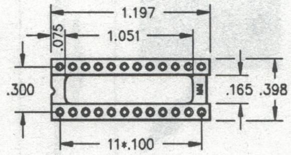
1.197
.075
1.051
.300
.165
.398
11*.100

422
Fig.107

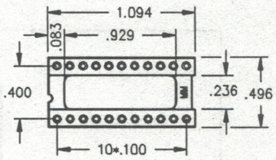
1.094
.083
.929
.400
.236
.496
10*.100

640
Fig.108

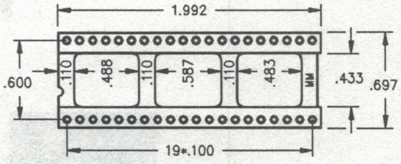
1.992
.600
.110
.488
.110
.587
.110
.483
.433
.697
19*.100

Automatic insertion,
Open Frame

DIP SOCKETS, CARRIERS AND HEADERS
QUICK SELECTOR CHART

USE THIS CONVENIENT CHART TO SELECT THE RIGHT DIP SOCKET FOR YOUR APPLICATION.

1) Determine the style of pin needed to meet your requirement.
2) Select the appropriate insulator frame.
3) Turn to indicated page for detail and ordering information.
4) * denotes pins that Mill-Max will custom assemble in a selected insulator.
Contact our applications engineers for further information.

DUAL-IN-LINE SOCKETS AND CARRIERS

								Surface Mount							Socket Carriers		
	SELECT PIN	Standard Solder Tail	Long Solder Tail	Very Low Profile	Ultra Low Profile	Auto-Insertion	Solderless Press-Fit	Gull-Wing	Stub Tail	1-4 Level Wrapost	Pluggable Wrapost	Elevated	Right Angle	Solder Tail	Low Profile	Miniature
SELECT INSULATOR	TURN TO PAGE #	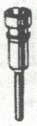	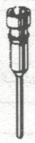	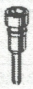	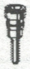	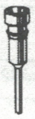	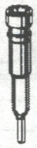	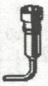	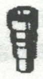	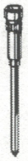	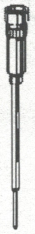	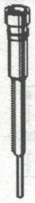	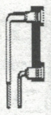	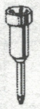	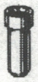	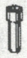
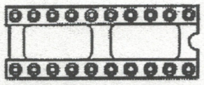	OPEN FRAME DIP	11	12	13	14	15	16 17	20	21	23	24	25	*	27	28	29
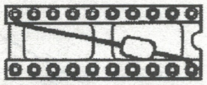	CAPACITOR DIP	18								18						
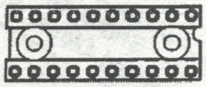	CLOSED FRAME DIP	19	*	*		*	*		22	19	*	*	26	*	*	*

For Shrink DIP Sockets (on .070” grid), see page 61.

DUAL-IN-LINE HEADERS

	SELECT PIN	.019 Dia. Pin Solder Tail & Wrapost	Slotted Head Solder Tail & Wrapost	Turret Head Solder Tail & Wrapost	Solder Cup Solder Tail & Wrapost	Elevated Pin to Pin
SELECT INSULATOR	TURN TO PAGE #	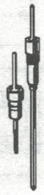	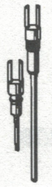	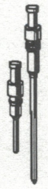	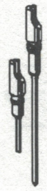	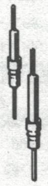
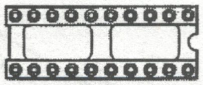	OPEN FRAME DIP	30	31	32	33	34 35 36

DUAL-IN-LINE SOCKETS
Standard Solder Tail
Open Frame

Series 110

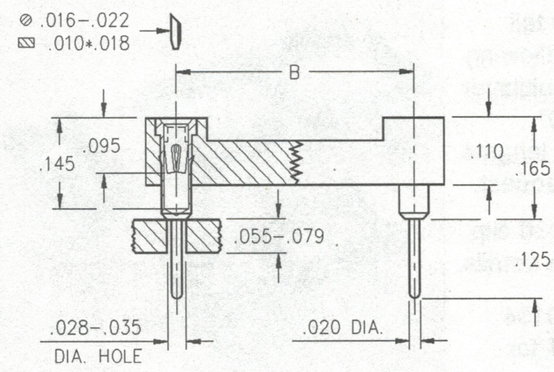

- Open frame design for better heat dissipation, cleaning & inspection.
- High temperature insulator available on request.
- Hi-Rel, 4-finger #30 clip. See page 157 for details.
- Uses Mill-Max #1001 pin. See page 91 for details.

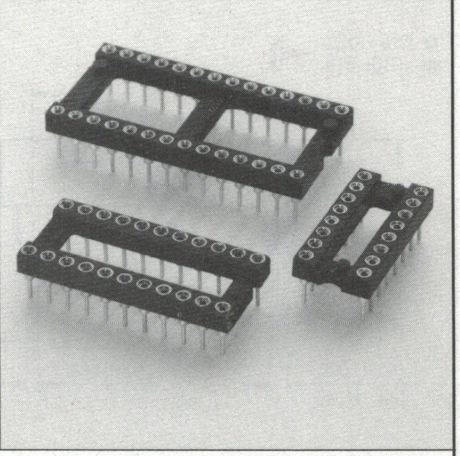

Total no. of pins	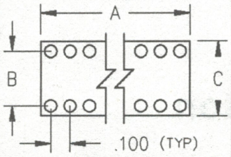 A	B	C	Insulator body (see page 7)	Ordering Information
	A	B	C		
10	0.5	0.2	0.3	Fig.1	110-XX-210-41-001
4	0.2	0.3	0.4	Fig.2	110-XX-304-41-001
6	0.3	0.3	0.4	Fig.3	110-XX-306-41-001
8	0.4	0.3	0.4	Fig.4	110-XX-308-41-001
10	0.5	0.3	0.4	Fig.5	110-XX-310-41-001
14	0.7	0.3	0.4	Fig.6	110-XX-314-41-001
16	0.8	0.3	0.4	Fig.7	110-XX-316-41-001
18	0.9	0.3	0.4	Fig.8	110-XX-318-41-001
20	1.0	0.3	0.4	Fig.9	110-XX-320-41-001
22	1.1	0.3	0.4	Fig.10	110-XX-322-41-001
24	1.2	0.3	0.4	Fig.11	110-XX-324-41-001
28	1.4	0.3	0.4	Fig.12	110-XX-328-41-001
20	1.0	0.4	0.5	Fig.13	110-XX-420-41-001
22	1.1	0.4	0.5	Fig.14	110-XX-422-41-001
24	1.2	0.4	0.5	Fig.15	110-XX-424-41-001
28	1.4	0.4	0.5	Fig.16	110-XX-428-41-001
32	1.6	0.4	0.5	Fig.17	110-XX-432-41-001
24	1.2	0.6	0.7	Fig.18	110-XX-624-41-001
28	1.4	0.6	0.7	Fig.19	110-XX-628-41-001
32	1.6	0.6	0.7	Fig.20	110-XX-632-41-001
36	1.8	0.6	0.7	Fig.21	110-XX-636-41-001
40	2.0	0.6	0.7	Fig.22	110-XX-640-41-001
42	2.1	0.6	0.7	Fig.23	110-XX-642-41-001
48	2.4	0.6	0.7	Fig.24	110-XX-648-41-001
50	2.5	0.6	0.7	Fig.25	110-XX-650-41-001
52	2.6	0.6	0.7	Fig.26	110-XX-652-41-001
50	2.5	0.9	1.0	Fig.27	110-XX-950-41-001
52	2.6	0.9	1.0	Fig.28	110-XX-952-41-001
64	3.2	0.9	1.0	Fig.29	110-XX-964-41-001

SPECIFY PLATING CODE XX=	13	91	93		99
Sleeve (Pin)	10μ" Au	200μ" Sn	200μ" Sn		200μ" Sn
Contact (Clip)	30μ" Au	10μ" Au	30μ" Au		200μ" Sn

DUAL-IN-LINE SOCKETS
Long Solder Tail for Multilayer PC-Boards
Open Frame

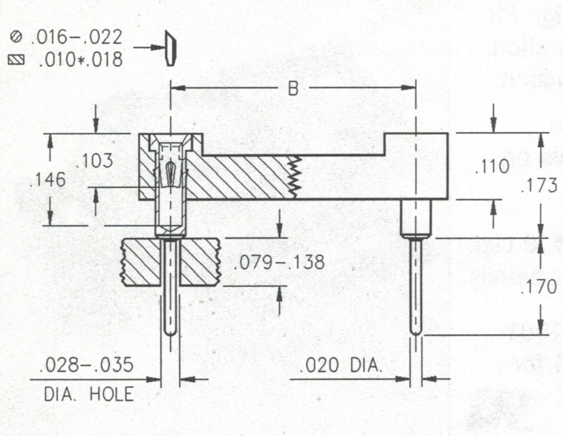

- DIP sockets with increased solder tail length of .170", allowing application on multilayer PCB's up to .139" thickness. Other lengths available upon request.
- Hi-Rel, 4-finger #30 clip. See page 157 for details.
- Uses Mill-Max #0134 pin. See page 91 for details.

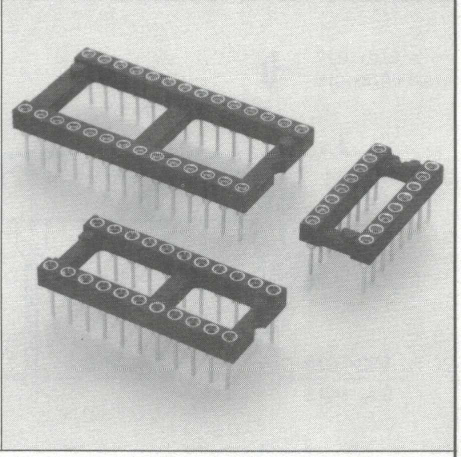

Total no. of pins	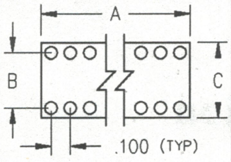 			Insulator body (see page 7)	Ordering Information
	A	B	C		
10	0.5	0.2	0.3	Fig.1	111-XX-210-41-001
4	0.2	0.3	0.4	Fig.2	111-XX-304-41-001
6	0.3	0.3	0.4	Fig.3	111-XX-306-41-001
8	0.4	0.3	0.4	Fig.4	111-XX-308-41-001
10	0.5	0.3	0.4	Fig.5	111-XX-310-41-001
14	0.7	0.3	0.4	Fig.6	111-XX-314-41-001
16	0.8	0.3	0.4	Fig.7	111-XX-316-41-001
18	0.9	0.3	0.4	Fig.8	111-XX-318-41-001
20	1.0	0.3	0.4	Fig.9	111-XX-320-41-001
22	1.1	0.3	0.4	Fig.10	111-XX-322-41-001
24	1.2	0.3	0.4	Fig.11	111-XX-324-41-001
28	1.4	0.3	0.4	Fig.12	111-XX-328-41-001
20	1.0	0.4	0.5	Fig.13	111-XX-420-41-001
22	1.1	0.4	0.5	Fig.14	111-XX-422-41-001
24	1.2	0.4	0.5	Fig.15	111-XX-424-41-001
28	1.4	0.4	0.5	Fig.16	111-XX-428-41-001
32	1.6	0.4	0.5	Fig.17	111-XX-432-41-001
24	1.2	0.6	0.7	Fig.18	111-XX-624-41-001
28	1.4	0.6	0.7	Fig.19	111-XX-628-41-001
32	1.6	0.6	0.7	Fig.20	111-XX-632-41-001
36	1.8	0.6	0.7	Fig.21	111-XX-636-41-001
40	2.0	0.6	0.7	Fig.22	111-XX-640-41-001
42	2.1	0.6	0.7	Fig.23	111-XX-642-41-001
48	2.4	0.6	0.7	Fig.24	111-XX-648-41-001
50	2.5	0.6	0.7	Fig.25	111-XX-650-41-001
52	2.6	0.6	0.7	Fig.26	111-XX-652-41-001
50	2.5	0.9	1.0	Fig.27	111-XX-950-41-001
52	2.6	0.9	1.0	Fig.28	111-XX-952-41-001
64	3.2	0.9	1.0	Fig.29	111-XX-964-41-001

SPECIFY PLATING CODE XX=	13	93	99
Sleeve (Pin)	10μ" Au	200μ" Sn	200μ" Sn
Contact (Clip)	30μ" Au	30μ" Au	200μ" Sn

DUAL-IN-LINE SOCKETS
Very Low Profile
Open Frame

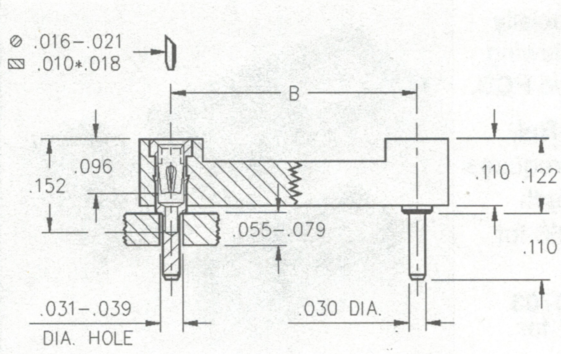

- DIP sockets with reduced height. (only .122" above PCB).
- Hi-Rel, 4-finger #30 clip. See page 157 for details.
- Uses Mill-Max #0501 pin. See page 88 for details.

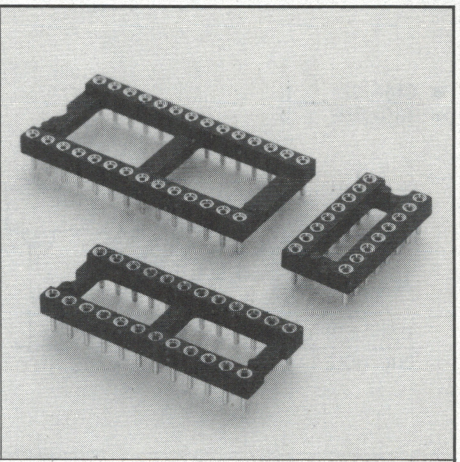

Ordering Information

Total no. of pins	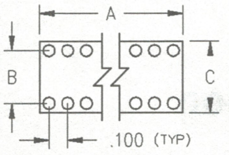			Insulator body (see page 7)	Ordering Information
	A	B	C		
10	0.5	0.2	0.3	Fig.1	115-XX-210-41-001
4	0.2	0.3	0.4	Fig.2	115-XX-304-41-001
6	0.3	0.3	0.4	Fig.3	115-XX-306-41-001
8	0.4	0.3	0.4	Fig.4	115-XX-308-41-001
10	0.5	0.3	0.4	Fig.5	115-XX-310-41-001
14	0.7	0.3	0.4	Fig.6	115-XX-314-41-001
16	0.8	0.3	0.4	Fig.7	115-XX-316-41-001
18	0.9	0.3	0.4	Fig.8	115-XX-318-41-001
20	1.0	0.3	0.4	Fig.9	115-XX-320-41-001
22	1.1	0.3	0.4	Fig.10	115-XX-322-41-001
24	1.2	0.3	0.4	Fig.11	115-XX-324-41-001
28	1.4	0.3	0.4	Fig.12	115-XX-328-41-001
20	1.0	0.4	0.5	Fig.13	115-XX-420-41-001
22	1.1	0.4	0.5	Fig.14	115-XX-422-41-001
24	1.2	0.4	0.5	Fig.15	115-XX-424-41-001
28	1.4	0.4	0.5	Fig.16	115-XX-428-41-001
32	1.6	0.4	0.5	Fig.17	115-XX-432-41-001
24	1.2	0.6	0.7	Fig.18	115-XX-624-41-001
28	1.4	0.6	0.7	Fig.19	115-XX-628-41-001
32	1.6	0.6	0.7	Fig.20	115-XX-632-41-001
36	1.8	0.6	0.7	Fig.21	115-XX-636-41-001
40	2.0	0.6	0.7	Fig.22	115-XX-640-41-001
42	2.1	0.6	0.7	Fig.23	115-XX-642-41-001
48	2.4	0.6	0.7	Fig.24	115-XX-648-41-001
50	2.5	0.6	0.7	Fig.25	115-XX-650-41-001
52	2.6	0.6	0.7	Fig.26	115-XX-652-41-001
50	2.5	0.9	1.0	Fig.27	115-XX-950-41-001
52	2.6	0.9	1.0	Fig.28	115-XX-952-41-001
64	3.2	0.9	1.0	Fig.29	115-XX-964-41-001

SPECIFY PLATING CODE XX=	13	93
Sleeve (Pin)	10μ" Au	200μ" Sn
Contact (Clip)	30μ" Au	30μ" Au

DUAL-IN-LINE SOCKETS
Ultra Low Profile
Open Frame

Series 115...003

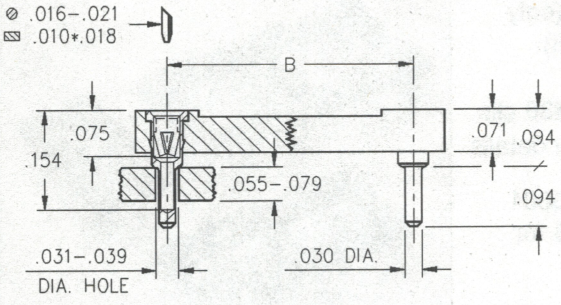

- Lowest profile DIP sockets have specially designed clips allowing .095" height above PCB.
- Special short, Hi-Rel, 4-finger #12 clip requires .075" insertion depth only. See page 156 for details.
- Uses Mill-Max #0703 pin. See page 87 for details.

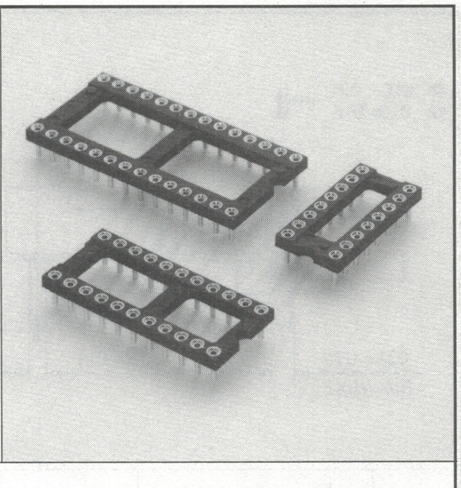

Total no. of pins	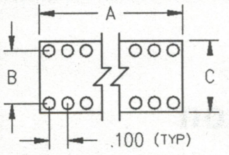			Insulator body (see page 8)	Ordering Information
	A	B	C		
6	0.3	0.3	0.4	Fig.50	115-XX-306-41-003
8	0.4	0.3	0.4	Fig.51	115-XX-308-41-003
14	0.7	0.3	0.4	Fig.52	115-XX-314-41-003
16	0.8	0.3	0.4	Fig.53	115-XX-316-41-003
18	0.9	0.3	0.4	Fig.54	115-XX-318-41-003
20	1.0	0.3	0.4	Fig.55	115-XX-320-41-003
22	1.1	0.3	0.4	Fig.56	115-XX-322-41-003
24	1.2	0.3	0.4	Fig.57	115-XX-324-41-003
28	1.4	0.3	0.4	Fig.58	115-XX-328-41-003
20	1.0	0.4	0.5	Fig.59	115-XX-420-41-003
22	1.1	0.4	0.5	Fig.60	115-XX-422-41-003
24	1.2	0.4	0.5	Fig.61	115-XX-424-41-003
28	1.4	0.4	0.5	Fig.62	115-XX-428-41-003
24	1.2	0.6	0.7	Fig.63	115-XX-624-41-003
28	1.4	0.6	0.7	Fig.64	115-XX-628-41-003
32	1.6	0.6	0.7	Fig.65	115-XX-632-41-003
36	1.8	0.6	0.7	Fig.66	115-XX-636-41-003
40	2.0	0.6	0.7	Fig.67	115-XX-640-41-003
48	2.4	0.6	0.7	Fig.68	115-XX-648-41-003
50	2.5	0.6	0.7	Fig.69	115-XX-650-41-003

SPECIFY PLATING CODE XX=		13	91	93		99
Sleeve (Pin)	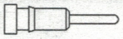	10μ" Au	200μ" Sn	200μ" Sn		200μ" Sn
Contact (Clip)		30μ" Au	10μ" Au	30μ" Au		200μ" Sn

DUAL-IN-LINE SOCKETS
Automatic Insertion
Open Frame

Series 110...605

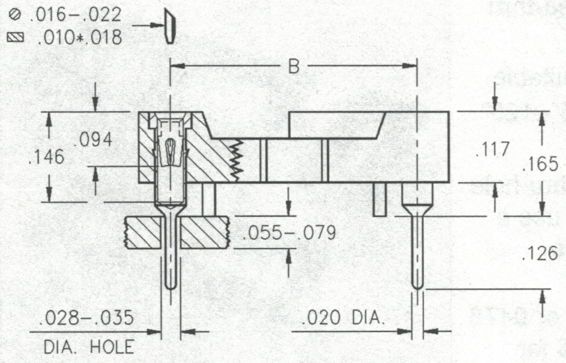

- Compatible with standard automatic insertion equipment.
- Rail standoffs on insulator
- Soft copper alloy machined contact allows clinching.
- Chamfered contact entries for IC insertion without bent leads.
- Uses M-M# 1005 pin. See page 92 for details.

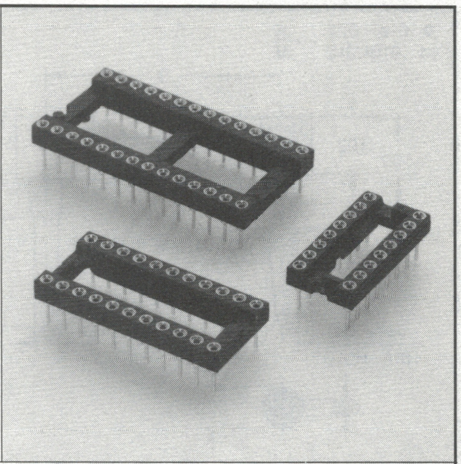

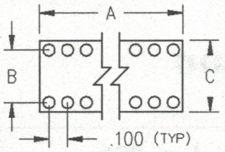

Total no. of pins	A	B	C	Insulator body (see pages 7 & 9)	Ordering Information
6	0.3	0.3	0.4	Fig.100	110-93-306-41-605
8	0.4	0.3	0.4	Fig.101	110-93-308-41-605
14	0.7	0.3	0.4	Fig.102	110-93-314-41-605
16	0.8	0.3	0.4	Fig.103	110-93-316-41-605
18	0.9	0.3	0.4	Fig.104	110-93-318-41-605
20	1.0	0.3	0.4	Fig.105	110-93-320-41-605
24	1.2	0.3	0.4	Fig.106	110-93-324-41-605
22	1.1	0.4	0.5	Fig.107	110-93-422-41-605
24	1.2	0.6	0.7	Fig.18	110-93-624-41-605
28	1.4	0.6	0.7	Fig.19	110-93-628-41-605
32	1.6	0.6	0.7	Fig.20	110-93-632-41-605
40	2.0	0.6	0.7	Fig.108	110-93-640-41-605

PLATING CODE XX=		93
Sleeve (Pin)	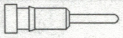	200µ" Sn
Contact (Clip)		30µ" Au

DUAL-IN-LINE SOCKETS
Solderless Press-Fit
Open Frame

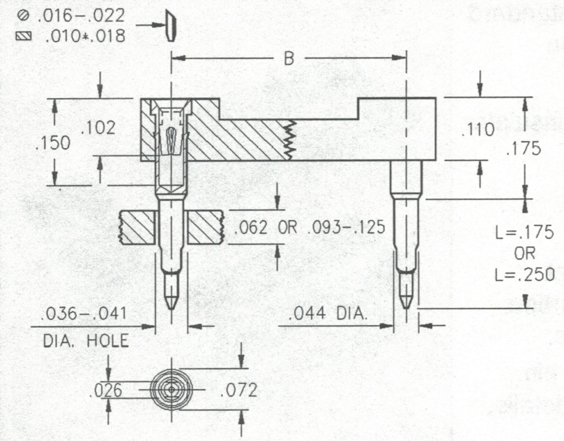

- Designed for solderless press-fit into plated-thru holes.
- Pin lengths are suitable for .062" and .093"-.125" thick panels.
- Required plated thru-hole is .036"-.041", ie: use a 1.1mm drill prior to plating.
- Uses M-M# 0477 or 0478 pins. See page 88 for details.

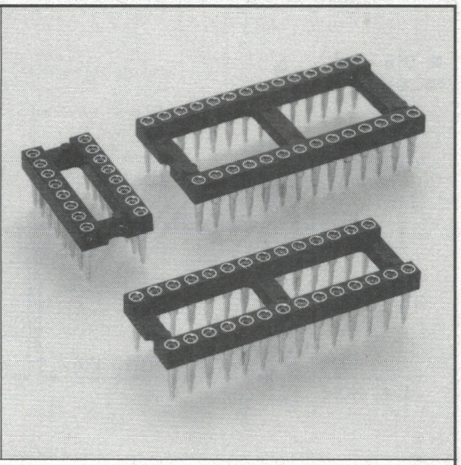

Total no. of pins	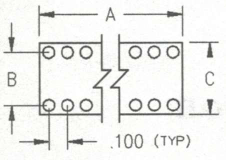 A B C .100 (TYP)			Insulator body (see page 7)	Ordering Information	
	A	B	C		L = .175 (for .062 thick panel)	L = .250 (for .125 thick panel)
10	0.5	0.2	0.3	Fig.1	104-13-210-41-770	104-13-210-41-780
4	0.2	0.3	0.4	Fig.2	104-13-304-41-770	104-13-304-41-780
6	0.3	0.3	0.4	Fig.3	104-13-306-41-770	104-13-306-41-780
8	0.4	0.3	0.4	Fig.4	104-13-308-41-770	104-13-308-41-780
10	0.5	0.3	0.4	Fig.5	104-13-310-41-770	104-13-310-41-780
14	0.7	0.3	0.4	Fig.6	104-13-314-41-770	104-13-314-41-780
16	0.8	0.3	0.4	Fig.7	104-13-316-41-770	104-13-316-41-780
18	0.9	0.3	0.4	Fig.8	104-13-318-41-770	104-13-318-41-780
20	1.0	0.3	0.4	Fig.9	104-13-320-41-770	104-13-320-41-780
22	1.1	0.3	0.4	Fig.10	104-13-322-41-770	104-13-322-41-780
24	1.2	0.3	0.4	Fig.11	104-13-324-41-770	104-13-324-41-780
28	1.4	0.3	0.4	Fig.12	104-13-328-41-770	104-13-328-41-780
20	1.0	0.4	0.5	Fig.13	104-13-420-41-770	104-13-420-41-780
22	1.1	0.4	0.5	Fig.14	104-13-422-41-770	104-13-422-41-780
24	1.2	0.4	0.5	Fig.15	104-13-424-41-770	104-13-424-41-780
28	1.4	0.4	0.5	Fig.16	104-13-428-41-770	104-13-428-41-780
32	1.6	0.4	0.5	Fig.17	104-93-432-41-770	104-13-432-41-780
24	1.2	0.6	0.7	Fig.18	104-13-624-41-770	104-13-624-41-780
28	1.4	0.6	0.7	Fig.19	104-13-628-41-770	104-13-628-41-780
32	1.6	0.6	0.7	Fig.20	104-13-632-41-770	104-13-632-41-780
36	1.8	0.6	0.7	Fig.21	104-13-636-41-770	104-13-636-41-780
40	2.0	0.6	0.7	Fig.22	104-13-640-41-770	104-13-640-41-780
42	2.1	0.6	0.7	Fig.23	104-13-642-41-770	104-13-642-41-780
48	2.4	0.6	0.7	Fig.24	104-13-648-41-770	104-13-648-41-780
50	2.5	0.6	0.7	Fig.25	104-13-650-41-770	104-13-650-41-780
52	2.6	0.6	0.7	Fig.26	104-13-652-41-770	104-13-652-41-780
50	2.5	0.9	1.0	Fig.27	104-13-950-41-770	104-13-950-41-780
52	2.6	0.9	1.0	Fig.28	104-13-952-41-770	104-13-952-41-780
64	3.2	0.9	1.0	Fig.29	104-13-964-41-770	104-13-964-41-780

PLATING CODE XX=		13
Sleeve (Pin)	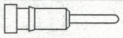	10µ" Au
Contact (Clip)		30µ" Au

DUAL IN-LINE SOCKETS
Solderless Press-Fit, Compliant Tail
Open Frame

Series 146

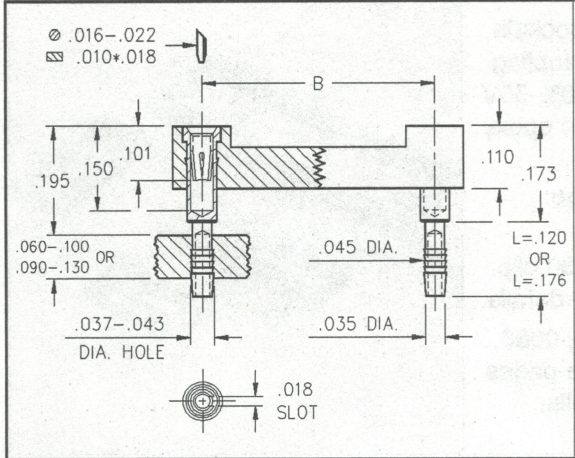

- Unique compliant tail pins conform to .040 ±.003" finished hole diameter without stressing inner layers.
- Two tail lengths are offered for .060"-.100" and .090"-.130" thick panels.
- Uses M-M# 4612 or 4613 pins. See page 88 for details.

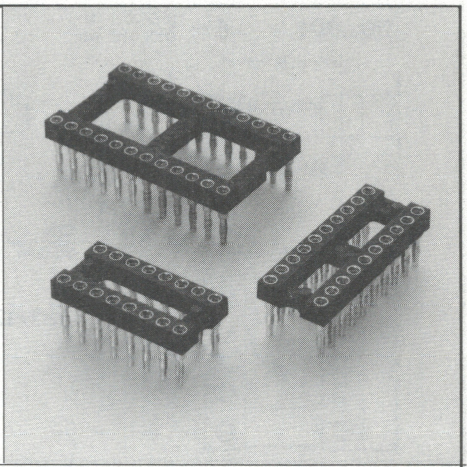

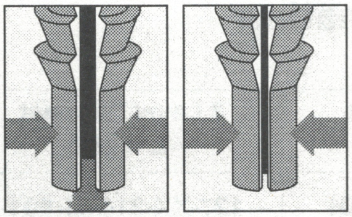

APPLICATION OF COMPLIANT TAIL PINS

Mill-Max's patented* compliant tail features precision machined pins that are hollow and slotted to conform to a .040" ± .003" diameter PTH. As the pin is inserted, the slot compresses to fit the PTH, thus avoiding damage (see illustration at left). The pin's tail has fine serrations that form a perfect "gas tight" connection that doesn't require soldering. And since the pin doesn't damage the hole, compliant tail sockets and connectors can be easily replaced.

*Patent No. 4,799,904.

Ordering Information

Total no. of pins	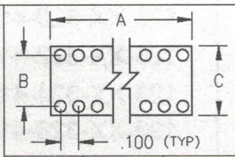 A	B	C	Insulator body (see page 7)	L=.120 (for .060"-.100" thick panel)	L=.176 (for .090"-.130" thick panel)
6	0.3	0.3	0.4	Fig.3	146-XX-306-41-012	146-XX-306-41-013
8	0.4	0.3	0.4	Fig.4	146-XX-308-41-012	146-XX-308-41-013
14	0.7	0.3	0.4	Fig.6	146-XX-314-41-012	146-XX-314-41-013
16	0.8	0.3	0.4	Fig.7	146-XX-316-41-012	146-XX-316-41-013
18	0.9	0.3	0.4	Fig.8	146-XX-318-41-012	146-XX-318-41-013
20	1.0	0.3	0.4	Fig.9	146-XX-320-41-012	146-XX-320-41-013
24	1.2	0.3	0.4	Fig.11	146-XX-324-41-012	146-XX-324-41-013
22	1.1	0.4	0.5	Fig.14	146-XX-422-41-012	146-XX-422-41-013
24	1.2	0.6	0.7	Fig.18	146-XX-624-41-012	146-XX-624-41-013
28	1.4	0.6	0.7	Fig.19	146-XX-628-41-012	146-XX-628-41-013
32	1.6	0.6	0.7	Fig.20	146-XX-632-41-012	146-XX-632-41-013
40	2.0	0.6	0.7	Fig.22	146-XX-640-41-012	146-XX-640-41-013

SPECIFY PLATING CODE XX=	93	99
Sleeve (Pin)	200µ" Sn	200µ" Sn
Contact (Clip)	30µ" Au	200µ" Sn

DUAL-IN-LINE SOCKETS
With Integral Decoupling Capacitor
Open Frame

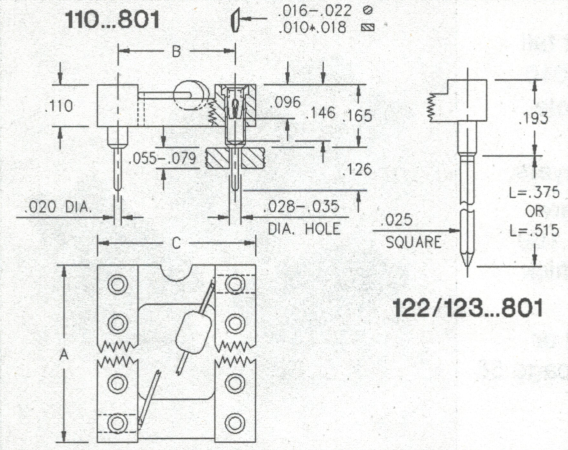

- Low profile DIP sockets with integral decoupling capacitor:.1µ F 20%-50V multilayer ceramic epoxy encapsulated.
- Temperature range: -25°C to +85°C.
- Hi-Rel, 4-finger #30 clip. See page 157 for details.
- Uses M-M #1001, 0088, or 0089 pins. See pages 91 & 115 for details.

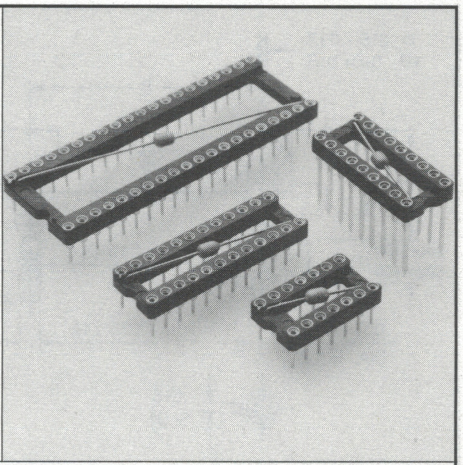

Ordering Information

Total no. of pins	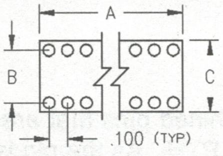 A	B	C	Insulator body (see page 7)	Solder Tail	2 Level Wrapost L = .375	3 Level Wrapost L = .515
14	0.7	0.3	0.4	Fig.6	110-XX-314-41-801	122-XX-314-41-801	123-XX-314-41-801
16	0.8	0.3	0.4	Fig.7	110-XX-316-41-801	122-XX-316-41-801	123-XX-316-41-801
18	0.9	0.3	0.4	Fig.8	110-XX-318-41-801	122-XX-318-41-801	123-XX-318-41-801
20	1.0	0.3	0.4	Fig.9	110-XX-320-41-801	122-XX-320-41-801	123-XX-320-41-801
22	1.1	0.3	0.4	Fig.10	110-XX-322-41-801	122-XX-322-41-801	123-XX-322-41-801
24	1.2	0.3	0.4	Fig.11	110-XX-324-41-801	122-XX-324-41-801	123-XX-324-41-801
28	1.4	0.3	0.4	Fig.12	110-XX-328-41-801	122-XX-328-41-801	123-XX-328-41-801
22	1.1	0.4	0.5	Fig.13	110-XX-422-41-801	122-XX-422-41-801	123-XX-422-41-801
24	1.2	0.6	0.7	Fig.18	110-XX-624-41-801	122-XX-624-41-801	123-XX-624-41-801
28	1.4	0.6	0.7	Fig.19	110-XX-628-41-801	122-XX-628-41-801	123-XX-628-41-801
32	1.6	0.6	0.7	Fig.20	110-XX-632-41-801	122-XX-632-41-801	123-XX-632-41-801
40	2.0	0.6	0.7	Fig.22	110-XX-640-41-801	122-XX-640-41-801	123-XX-640-41-801

SPECIFY PLATING CODE XX=	13	93
Sleeve (Pin)	10µ" Au	200µ" Sn
Contact (Clip)	30µ" Au	30µ" Au

DUAL-IN-LINE SOCKETS
Solder Tail and Wrapost
Closed Frame

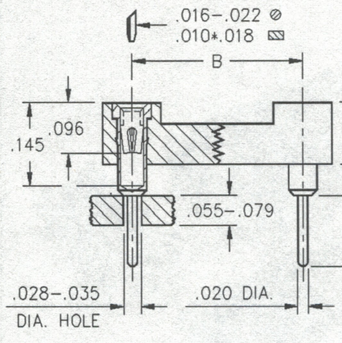

210...01

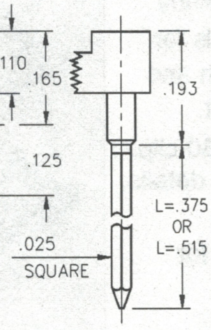

222/223...01

- Closed frame insulator withstands high mechanical impact. Low profile.
- Available with standard solder pins or 2-level and 3-level wraposts.
- Hi-Rel, 4-finger #30 clip. See page 157 for details.
- Uses M-M #1001, 0088, or 0089 pins. See pages 91 & 115 for details.

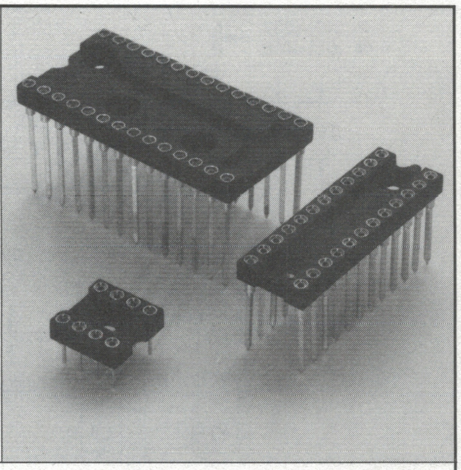

Ordering Information

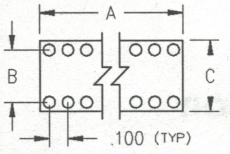

Total no. of pins	A	B	C	Insulator body (see page 8)	Solder Tail	2 Level Wrapost L = .375	3 Level Wrapost L = .515
6	0.3	0.3	0.4	Fig.30	210-XX-306-41-001	222-XX-306-41-001	223-XX-306-41-001
8	0.4	0.3	0.4	Fig.31	210-XX-308-41-001	222-XX-308-41-001	223-XX-308-41-001
10	0.5	0.3	0.4	Fig.32	210-XX-310-41-001	222-XX-310-41-001	223-XX-310-41-001
14	0.7	0.3	0.4	Fig.33	210-XX-314-41-001	222-XX-314-41-001	223-XX-314-41-001
16	0.8	0.3	0.4	Fig.34	210-XX-316-41-001	222-XX-316-41-001	223-XX-316-41-001
18	0.9	0.3	0.4	Fig.35	210-XX-318-41-001	222-XX-318-41-001	223-XX-318-41-001
20	1.0	0.3	0.4	Fig.36	210-XX-320-41-001	222-XX-320-41-001	223-XX-320-41-001
22	1.1	0.3	0.4	Fig.37	210-XX-322-41-001	222-XX-322-41-001	223-XX-322-41-001
24	1.2	0.3	0.4	Fig.38	210-XX-324-41-001	222-XX-324-41-001	223-XX-324-41-001
22	1.1	0.4	0.5	Fig.39	210-XX-422-41-001	222-XX-422-41-001	223-XX-422-41-001
24	1.2	0.4	0.5	Fig.40	210-XX-424-41-001	222-XX-424-41-001	223-XX-424-41-001
24	1.2	0.6	0.7	Fig.41	210-XX-624-41-001	222-XX-624-41-001	223-XX-624-41-001
28	1.4	0.6	0.7	Fig.42	210-XX-628-41-001	222-XX-628-41-001	223-XX-628-41-001
32	1.6	0.6	0.7	Fig.43	210-XX-632-41-001	222-XX-632-41-001	223-XX-632-41-001
36	1.8	0.6	0.7	Fig.44	210-XX-636-41-001	222-XX-636-41-001	223-XX-636-41-001
40	2.0	0.6	0.7	Fig.45	210-XX-640-41-001	222-XX-640-41-001	223-XX-640-41-001
64	3.2	0.9	1.0	Fig.46	210-XX-964-41-001	222-XX-964-41-001	223-XX-964-41-001

SPECIFY PLATING CODE XX=	13	93
Sleeve (Pin) 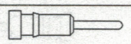	10µ" Au	200µ" Sn
Contact (Clip)	30µ" Au	30µ" Au

DUAL-IN-LINE SOCKETS
Surface Mount, Gull Wing
Open Frame

Series 110...105

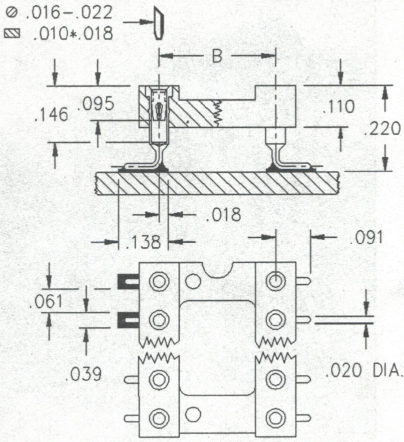

- For infra-red reflow and vapor phase soldering
- Gull wing terminals for maximum strength and easy in-circuit test.
- Hi-Rel, 4-finger #30 clip. See page 157 for details.
- Uses M-M #1005 pin. See page 92 for details.

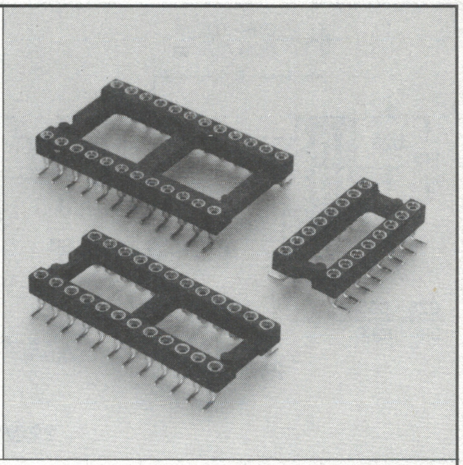

Total no. of pins	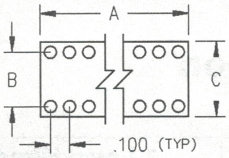			Insulator body (see page 7)	Ordering Information
	A	B	C		
10	0.5	0.2	0.3	Fig.1	110-93-210-41-105
4	0.2	0.3	0.4	Fig.2	110-93-304-41-105
6	0.3	0.3	0.4	Fig.3	110-93-306-41-105
8	0.4	0.3	0.4	Fig.4	110-93-308-41-105
10	0.5	0.3	0.4	Fig.5	110-93-310-41-105
14	0.7	0.3	0.4	Fig.6	110-93-314-41-105
16	0.8	0.3	0.4	Fig.7	110-93-316-41-105
18	0.9	0.3	0.4	Fig.8	110-93-318-41-105
20	1.0	0.3	0.4	Fig.9	110-93-320-41-105
22	1.1	0.3	0.4	Fig.10	110-93-322-41-105
24	1.2	0.3	0.4	Fig.11	110-93-324-41-105
28	1.4	0.3	0.4	Fig.12	110-93-328-41-105
20	1.0	0.4	0.5	Fig.13	110-93-420-41-105
22	1.1	0.4	0.5	Fig.14	110-93-422-41-105
24	1.2	0.4	0.5	Fig.15	110-93-424-41-105
28	1.4	0.4	0.5	Fig.16	110-93-428-41-105
32	1.6	0.4	0.5	Fig.17	110-93-432-41-105
24	1.2	0.6	0.7	Fig.18	110-93-624-41-105
28	1.4	0.6	0.7	Fig.19	110-93-628-41-105
32	1.6	0.6	0.7	Fig.20	110-93-632-41-105
36	1.8	0.6	0.7	Fig.21	110-93-636-41-105
40	2.0	0.6	0.7	Fig.22	110-93-640-41-105
42	2.1	0.6	0.7	Fig.23	110-93-642-41-105
48	2.4	0.6	0.7	Fig.24	110-93-648-41-105
50	2.5	0.6	0.7	Fig.25	110-93-650-41-105
52	2.6	0.6	0.7	Fig.26	110-93-652-41-105
50	2.5	0.9	1.0	Fig.27	110-93-950-41-105
52	2.6	0.9	1.0	Fig.28	110-93-952-41-105
64	3.2	0.9	1.0	Fig.29	110-93-964-41-105

PLATING CODE		93
Sleeve (Pin)	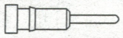	200µ" Sn
Contact (Clip)		30µ" Au

DUAL-IN-LINE SOCKETS
Surface Mount, Stub Tail
Open Frame

Series 114...117

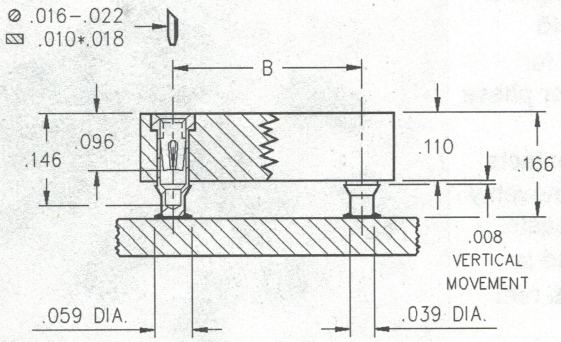

- For infra-red reflow and vapor phase soldering
- Unique floating contacts compensate effects of unevenly dispensed solder paste.
- Hi-Rel, 4-finger #30 clip. See page 157 for details.
- Uses Mill-Max #1434 pin. See page 88 for details.

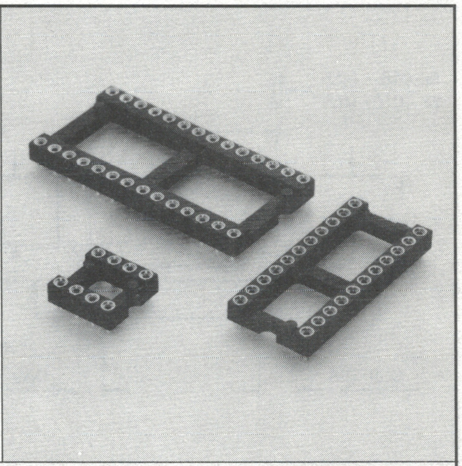

Total no. of pins	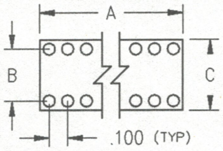			Insulator body (see page 7)	Ordering Information
	A	B	C		
10	0.5	0.2	0.3	Fig.1	114-93-210-41-117
4	0.2	0.3	0.4	Fig.2	114-93-304-41-117
6	0.3	0.3	0.4	Fig.3	114-93-306-41-117
8	0.4	0.3	0.4	Fig.4	114-93-308-41-117
10	0.5	0.3	0.4	Fig.5	114-93-310-41-117
14	0.7	0.3	0.4	Fig.6	114-93-314-41-117
16	0.8	0.3	0.4	Fig.7	114-93-316-41-117
18	0.9	0.3	0.4	Fig.8	114-93-318-41-117
20	1.0	0.3	0.4	Fig.9	114-93-320-41-117
22	1.1	0.3	0.4	Fig.10	114-93-322-41-117
24	1.2	0.3	0.4	Fig.11	114-93-324-41-117
28	1.4	0.3	0.4	Fig.12	114-93-328-41-117
20	1.0	0.4	0.5	Fig.13	114-93-420-41-117
22	1.1	0.4	0.5	Fig.14	114-93-422-41-117
24	1.2	0.4	0.5	Fig.15	114-93-424-41-117
28	1.4	0.4	0.5	Fig.16	114-93-428-41-117
32	1.6	0.4	0.5	Fig.17	114-93-432-41-117
24	1.2	0.6	0.7	Fig.18	114-93-624-41-117
28	1.4	0.6	0.7	Fig.19	114-93-628-41-117
32	1.6	0.6	0.7	Fig.20	114-93-632-41-117
36	1.8	0.6	0.7	Fig.21	114-93-636-41-117
40	2.0	0.6	0.7	Fig.22	114-93-640-41-117
42	2.1	0.6	0.7	Fig.23	114-93-642-41-117
48	2.4	0.6	0.7	Fig.24	114-93-648-41-117
50	2.5	0.6	0.7	Fig.25	114-93-650-41-117
52	2.6	0.6	0.7	Fig.26	114-93-652-41-117
50	2.5	0.9	1.0	Fig.27	114-93-950-41-117
52	2.6	0.9	1.0	Fig.28	114-93-952-41-117
64	3.2	0.9	1.0	Fig.29	114-93-964-41-117

PLATING CODE	93
Sleeve (Pin)	200µ" Sn
Contact (Clip)	30µ" Au

DUAL IN-LINE SOCKETS
Surface Mount, Auto Placement, Stub Tail Closed Frame

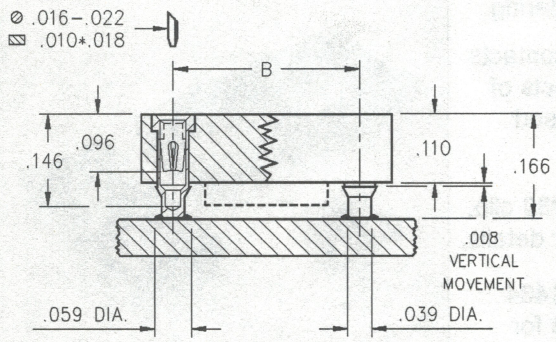

- Closed frame insulator is vision system compatible.
- High-temp Nylon 46 insulator, suitable for infra-red and vapor phase soldering.
- Unique floating contacts compensate for unevenly screened solder paste.
- Available packaged in tubes or on tape & reel per EIA-481.
- Uses Mill-Max #1434 pin.

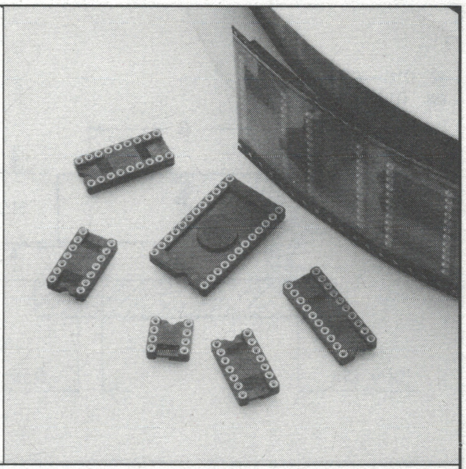

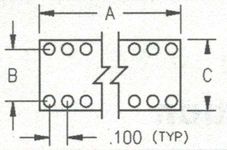

Ordering Information

Total no. of pins	A	B	C	TUBE PACKAGING	TAPE & REEL PACKAGING	TAPE WIDTH (mm)	QTY PER REEL
				VACUUM PAD TOP SURFACE ONLY			
8	0.4	0.3	0.4	214-99-308-01-670800	214-99-308-01-670799	16	1000
14	0.7	0.3	0.4	214-99-314-01-670800	214-99-314-01-670799	32	750
16	0.8	0.3	0.4	214-99-316-01-670800	214-99-316-01-670799	32	750
18	0.9	0.3	0.4	214-99-318-01-670800	214-99-318-01-670799	44	750
20	1.0	0.3	0.4	214-99-320-01-670800	214-99-320-01-670799	44	750
				VACUUM PAD TOP AND BOTTOM			
24	1.2	0.6	0.7	214-99-624-01-670800	214-99-624-01-670799	44	400
28	1.4	0.6	0.7	214-99-628-01-670800	214-99-628-01-670799	56	400
32	1.6	0.6	0.7	214-99-632-01-670800	214-99-632-01-670799	56	400
40	2.0	0.6	0.7	214-99-640-01-670800	NOT AVAILABLE		

PLATING CODE	99
Sleeve (Pin) 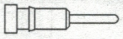	200µ" Sn
Contact (Clip)	200µ" Sn

DUAL-IN-LINE SOCKETS
1 thru 4 Level Wrapost
Open Frame

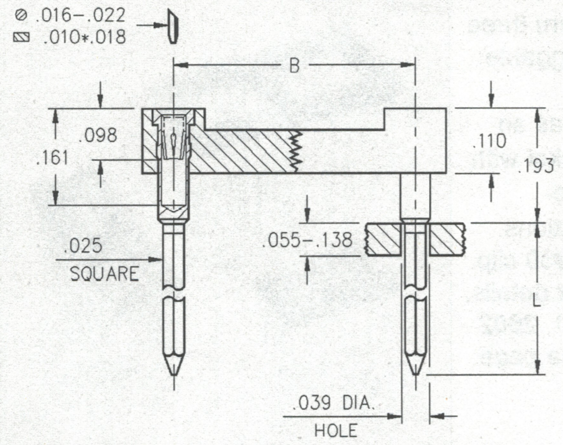

- Solderless wrapost terminals are firmly locked in the insulator body to withstand torque of wrapping tool.
- Hi-Rel, 4-finger #30 clip. See page 157 for details.
- Uses M-M #0040, 0089, 0088 or 0086 pins. See page 115 for details.

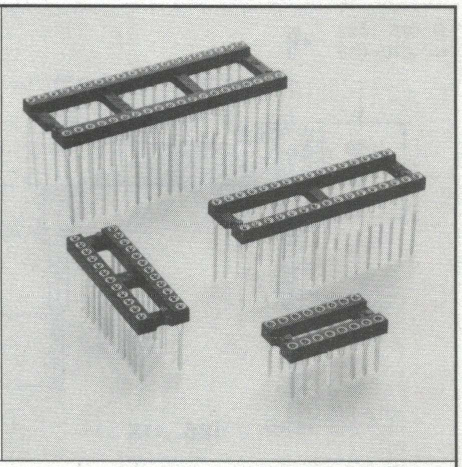

Ordering Information

Total no. of pins	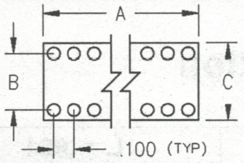			Insulator body (see page 7)	1 Level Wrapost L = .260	2 Level Wrapost L = .375	3 Level Wrapost L = .515	4 Level Wrapost L = .630
	A	B	C					
10	0.5	0.2	0.3	Fig.1	121-XX-210-41-001	122-XX-210-41-001	123-XX-210-41-001	124-XX-210-41-002
4	0.2	0.3	0.4	Fig.2	121-XX-304-41-001	122-XX-304-41-001	123-XX-304-41-001	124-XX-304-41-002
6	0.3	0.3	0.4	Fig.3	121-XX-306-41-001	122-XX-306-41-001	123-XX-306-41-001	124-XX-306-41-002
8	0.4	0.3	0.4	Fig.4	121-XX-308-41-001	122-XX-308-41-001	123-XX-308-41-001	124-XX-308-41-002
10	0.5	0.3	0.4	Fig.5	121-XX-310-41-001	122-XX-310-41-001	123-XX-310-41-001	124-XX-310-41-002
14	0.7	0.3	0.4	Fig.6	121-XX-314-41-001	122-XX-314-41-001	123-XX-314-41-001	124-XX-314-41-002
16	0.8	0.3	0.4	Fig.7	121-XX-316-41-001	122-XX-316-41-001	123-XX-316-41-001	124-XX-316-41-002
18	0.9	0.3	0.4	Fig.8	121-XX-318-41-001	122-XX-318-41-001	123-XX-318-41-001	124-XX-318-41-002
20	1.0	0.3	0.4	Fig.9	121-XX-320-41-001	122-XX-320-41-001	123-XX-320-41-001	124-XX-320-41-002
22	1.1	0.3	0.4	Fig.10	121-XX-322-41-001	122-XX-322-41-001	123-XX-322-41-001	124-XX-322-41-002
24	1.2	0.3	0.4	Fig.11	121-XX-324-41-001	122-XX-324-41-001	123-XX-324-41-001	124-XX-324-41-002
28	1.4	0.3	0.4	Fig.12	121-XX-328-41-001	122-XX-328-41-001	123-XX-328-41-001	124-XX-328-41-002
20	1.0	0.4	0.5	Fig.13	121-XX-420-41-001	122-XX-420-41-001	123-XX-420-41-001	124-XX-420-41-002
22	1.1	0.4	0.5	Fig.14	121-XX-422-41-001	122-XX-422-41-001	123-XX-422-41-001	124-XX-422-41-002
24	1.2	0.4	0.5	Fig.15	121-XX-424-41-001	122-XX-424-41-001	123-XX-424-41-001	124-XX-424-41-002
28	1.4	0.4	0.5	Fig.16	121-XX-428-41-001	122-XX-428-41-001	123-XX-428-41-001	124-XX-428-41-002
32	1.6	0.4	0.5	Fig.17	121-XX-432-41-001	122-XX-432-41-001	123-XX-432-41-001	124-XX-432-41-002
24	1.2	0.6	0.7	Fig.18	121-XX-624-41-001	122-XX-624-41-001	123-XX-624-41-001	124-XX-624-41-002
28	1.4	0.6	0.7	Fig.19	121-XX-628-41-001	122-XX-628-41-001	123-XX-628-41-001	124-XX-628-41-002
32	1.6	0.6	0.7	Fig.20	121-XX-632-41-001	122-XX-632-41-001	123-XX-632-41-001	124-XX-632-41-002
36	1.8	0.6	0.7	Fig.21	121-XX-636-41-001	122-XX-636-41-001	123-XX-636-41-001	124-XX-636-41-002
40	2.0	0.6	0.7	Fig.22	121-XX-640-41-001	122-XX-640-41-001	123-XX-640-41-001	124-XX-640-41-002
42	2.1	0.6	0.7	Fig.23	121-XX-642-41-001	122-XX-642-41-001	123-XX-642-41-001	124-XX-642-41-002
48	2.4	0.6	0.7	Fig.24	121-XX-648-41-001	122-XX-648-41-001	123-XX-648-41-001	124-XX-648-41-002
50	2.5	0.6	0.7	Fig.25	121-XX-650-41-001	122-XX-650-41-001	123-XX-650-41-001	124-XX-650-41-002
52	2.6	0.6	0.7	Fig.26	121-XX-652-41-001	122-XX-652-41-001	123-XX-652-41-001	124-XX-652-41-002
50	2.5	0.9	1.0	Fig.27	121-XX-950-41-001	122-XX-950-41-001	123-XX-950-41-001	124-XX-950-41-002
52	2.6	0.9	1.0	Fig.28	121-XX-952-41-001	122-XX-952-41-001	123-XX-952-41-001	124-XX-952-41-002
64	3.2	0.9	1.0	Fig.29	121-XX-964-41-001	122-XX-964-41-001	123-XX-964-41-001	124-XX-964-41-002

SPECIFY PLATING CODE XX=	13	93
Sleeve (Pin) 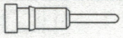	10µ" Au	200µ" Sn
Contact (Clip)	30µ" Au	30µ" Au

DUAL-IN-LINE SOCKETS
Pluggable Wrapost Open Frame

Series 126

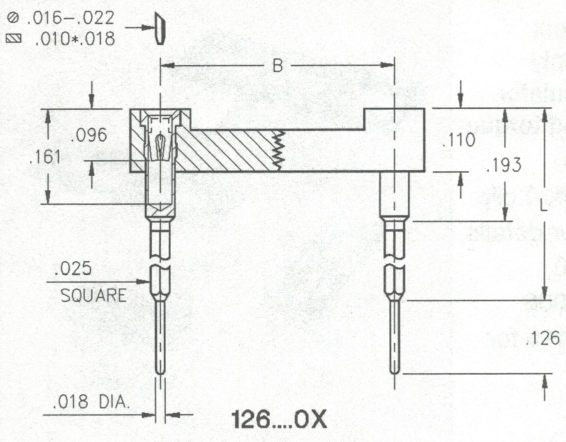

- Combines one thru three wrapost with pluggable solder tail.
- Suitable for use as an interconnect socket with intermediate wire-wrapped connections.
- Hi-Rel, 4-finger #30 clip. See page 157 for details.
- Uses M-M #2601, 2602 or 2603 pins. See page 116 for details.

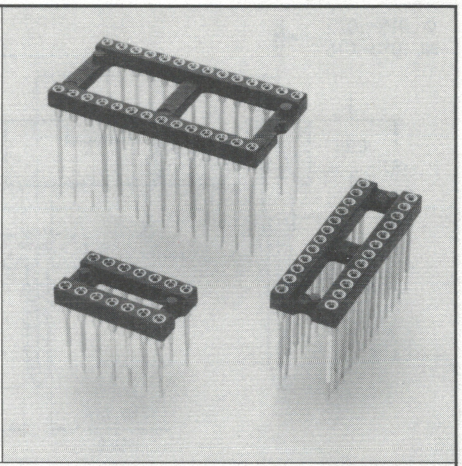

Total no. of pins	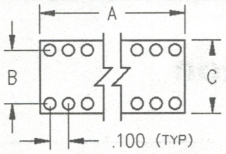			Insulator body (see page 7)	Ordering Information		
	A	B	C		L = .425 (1 level = .232)	L = .543 (2 level = .350)	L = .661 (3 level = .469)
10	0.5	0.2	0.3	Fig.1	126-XX-210-41-001	126-XX-210-41-002	126-XX-210-41-003
4	0.2	0.3	0.4	Fig.2	126-XX-304-41-001	126-XX-304-41-002	126-XX-304-41-003
6	0.3	0.3	0.4	Fig.3	126-XX-306-41-001	126-XX-306-41-002	126-XX-306-41-003
8	0.4	0.3	0.4	Fig.4	126-XX-308-41-001	126-XX-308-41-002	126-XX-308-41-003
10	0.5	0.3	0.4	Fig.5	126-XX-310-41-001	126-XX-310-41-002	126-XX-310-41-003
14	0.7	0.3	0.4	Fig.6	126-XX-314-41-001	126-XX-314-41-002	126-XX-314-41-003
16	0.8	0.3	0.4	Fig.7	126-XX-316-41-001	126-XX-316-41-002	126-XX-316-41-003
18	0.9	0.3	0.4	Fig.8	126-XX-318-41-001	126-XX-318-41-002	126-XX-318-41-003
20	1.0	0.3	0.4	Fig.9	126-XX-320-41-001	126-XX-320-41-002	126-XX-320-41-003
22	1.1	0.3	0.4	Fig.10	126-XX-322-41-001	126-XX-322-41-002	126-XX-322-41-003
24	1.2	0.3	0.4	Fig.11	126-XX-324-41-001	126-XX-324-41-002	126-XX-324-41-003
28	1.4	0.3	0.4	Fig.12	126-XX-328-41-001	126-XX-328-41-002	126-XX-328-41-003
20	1.0	0.4	0.5	Fig.13	126-XX-420-41-001	126-XX-420-41-002	126-XX-420-41-003
22	1.1	0.4	0.5	Fig.14	126-XX-422-41-001	126-XX-422-41-002	126-XX-422-41-003
24	1.2	0.4	0.5	Fig.15	126-XX-424-41-001	126-XX-424-41-002	126-XX-424-41-003
28	1.4	0.4	0.5	Fig.16	126-XX-428-41-001	126-XX-428-41-002	126-XX-428-41-003
32	1.6	0.4	0.5	Fig.17	126-XX-432-41-001	126-XX-432-41-002	126-XX-432-41-003
24	1.2	0.6	0.7	Fig.18	126-XX-624-41-001	126-XX-624-41-002	126-XX-624-41-003
28	1.4	0.6	0.7	Fig.19	126-XX-628-41-001	126-XX-628-41-002	126-XX-628-41-003
32	1.6	0.6	0.7	Fig.20	126-XX-632-41-001	126-XX-632-41-002	126-XX-632-41-003
36	1.8	0.6	0.7	Fig.21	126-XX-636-41-001	126-XX-636-41-002	126-XX-636-41-003
40	2.0	0.6	0.7	Fig.22	126-XX-640-41-001	126-XX-640-41-002	126-XX-640-41-003
42	2.1	0.6	0.7	Fig.23	126-XX-642-41-001	126-XX-642-41-002	126-XX-642-41-003
48	2.4	0.6	0.7	Fig.24	126-XX-648-41-001	126-XX-648-41-002	126-XX-648-41-003
50	2.5	0.6	0.7	Fig.25	126-XX-650-41-001	126-XX-650-41-002	126-XX-650-41-003
52	2.6	0.6	0.7	Fig.26	126-XX-652-41-001	126-XX-652-41-002	126-XX-652-41-003
50	2.5	0.9	1.0	Fig.27	126-XX-950-41-001	126-XX-950-41-002	126-XX-950-41-003
52	2.6	0.9	1.0	Fig.28	126-XX-952-41-001	126-XX-952-41-002	126-XX-952-41-003
64	3.2	0.9	1.0	Fig.29	126-XX-964-41-001	126-XX-964-41-002	126-XX-964-41-003

SPECIFY PLATING CODE XX=		13	93
Sleeve (Pin)	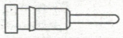	10µ" Au	200µ" Sn
Contact (Clip)	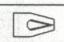	30µ" Au	30µ" Au

DUAL-IN-LINE SOCKETS
Elevated
Open Frame

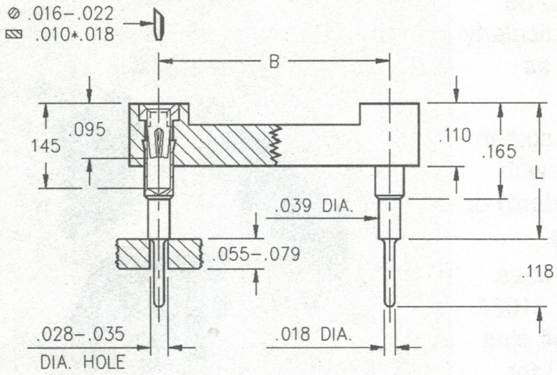

116...OX

- For mechanical and electrical interconnecttion and stacking of PCB's.
- Other platings and heights on request.
- Hi-Rel, 4-finger #30 clip. See page 157 for details.
- Uses M-M #0153 pin. See page 93 for details.

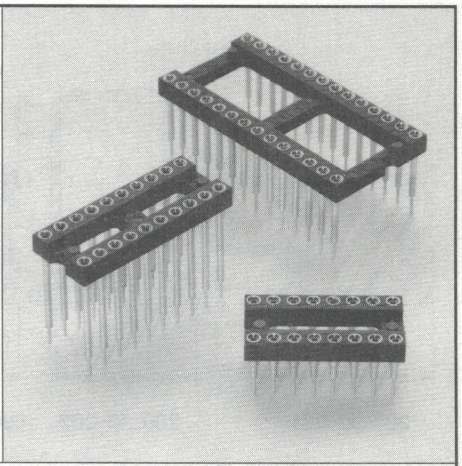

Total no. of pins	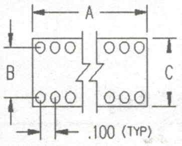			Insulator body (see page 7)	Ordering Information				
	A	B	C		L = .236	L = .315	L = .402	L = .472	L = .594
10	0.5	0.2	0.3	Fig.1	116-93-210-41-006	116-93-210-41-003	116-93-210-41-007	116-93-210-41-008	116-93-210-41-001
4	0.2	0.2	0.4	Fig.2	116-93-304-41-006	116-93-304-41-003	116-93-304-41-007	116-93-304-41-008	116-93-304-41-001
6	0.3	0.3	0.4	Fig.3	116-93-306-41-006	116-93-306-41-003	116-93-306-41-007	116-93-306-41-008	116-93-306-41-001
8	0.4	0.3	0.4	Fig.4	116-93-308-41-006	116-93-308-41-003	116-93-308-41-007	116-93-308-41-008	116-93-308-41-001
10	0.5	0.3	0.4	Fig5	116-93-310-41-006	116-93-310-41-003	116-93-310-41-007	116-93-310-41-008	116-93-310-41-001
14	0.7	0.3	0.4	Fig.6	116-93-314-41-006	116-93-314-41-003	116-93-314-41-007	116-93-314-41-008	116-93-314-41-001
16	0.8	0.3	0.4	Fig.7	116-93-316-41-006	116-93-316-41-003	116-93-316-41-007	116-93-316-41-008	116-93-316-41-001
18	0.9	0.3	0.4	Fig.8	116-93-318-41-006	116-93-318-41-003	116-93-318-41-007	116-93-318-41-008	116-93-318-41-001
20	1.0	0.3	0.4	Fig.9	116-93-320-41-006	116-93-320-41-003	116-93-320-41-007	116-93-320-41-008	116-93-320-41-001
22	1.1	0.3	0.4	Fig.10	116-93-322-41-006	116-93-322-41-003	116-93-322-41-007	116-93-322-41-008	116-93-322-41-001
24	1.2	0.3	0.4	Fig.11	116-93-324-41-006	116-93-324-41-003	116-93-324-41-007	116-93-324-41-008	116-93-324-41-001
28	1.4	0.3	0.4	Fig.12	116-93-328-41-006	116-93-328-41-003	116-93-328-41-007	116-93-328-41-008	116-93-328-41-001
20	1.0	0.4	0.5	Fig.13	116-93-420-41-006	116-93-420-41-003	116-93-420-41-007	116-93-420-41-008	116-93-420-41-001
22	1.1	0.4	0.5	Fig.14	116-93-422-41-006	116-93-422-41-003	116-93-422-41-007	116-93-422-41-008	116-93-422-41-001
24	1.2	0.4	0.5	Fig.15	116-93-424-41-006	116-93-424-41-003	116-93-424-41-007	116-93-424-41-008	116-93-424-41-001
28	1.4	0.4	0.5	Fig.16	116-93-428-41-006	116-93-428-41-003	116-93-428-41-007	116-93-428-41-008	116-93-428-41-001
32	1.6	0.4	0.5	Fig.17	116-93-432-41-006	116-93-432-41-003	116-93-432-41-007	116-93-432-41-008	116-93-432-41-001
24	1.2	0.6	0.7	Fig.18	116-93-624-41-006	116-93-624-41-003	116-93-624-41-007	116-93-624-41-008	116-93-624-41-001
28	1.4	0.6	0.7	Fig.19	116-93-628-41-006	116-93-628-41-003	116-93-628-41-007	116-93-628-41-008	116-93-628-41-001
32	1.6	0.6	0.7	Fig.20	116-93-632-41-006	116-93-632-41-003	116-93-632-41-007	116-93-632-41-008	116-93-632-41-001
36	1.8	0.6	0.7	Fig.21	116-93-636-41-006	116-93-636-41-003	116-93-636-41-007	116-93-636-41-008	116-93-636-41-001
40	2.0	0.6	0.7	Fig.22	116-93-640-41-006	116-93-640-41-003	116-93-640-41-007	116-93-640-41-008	116-93-640-41-001
42	2.1	0.6	0.7	Fig.23	116-93-642-41-006	116-93-642-41-003	116-93-642-41-007	116-93-642-41-008	116-93-642-41-001
48	2.4	0.6	0.7	Fig.24	116-93-648-41-006	116-93-648-41-003	116-93-648-41-007	116-93-648-41-008	116-93-648-41-001
50	2.5	0.6	0.7	Fig.25	116-93-650-41-006	116-93-650-41-003	116-93-650-41-007	116-93-650-41-008	116-93-650-41-001
52	2.6	0.6	0.7	Fig.26	116-93-652-41-006	116-93-652-41-003	116-93-652-41-007	116-93-652-41-008	116-93-652-41-001
50	2.5	0.9	1.0	Fig.27	116-93-950-41-006	116-93-950-41-003	116-93-950-41-007	116-93-950-41-008	116-93-950-41-001
52	2.6	0.9	1.0	Fig.28	116-93-952-41-006	116-93-952-41-003	116-93-952-41-007	116-93-952-41-008	116-93-952-41-001
64	3.2	0.9	1.0	Fig.29	116-93-964-41-006	116-93-964-41-003	116-93-964-41-007	116-93-964-41-008	116-93-964-41-001

PLATING CODE	93		
Sleeve (Pin)	200µ" Sn		
Contact (Clip)	30µ" Au		

DUAL IN-LINE SOCKETS
Right Angle Mount
Closed Frame

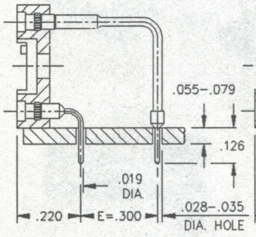

299...10-001

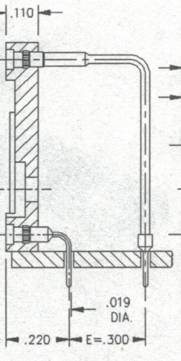

299...10-002

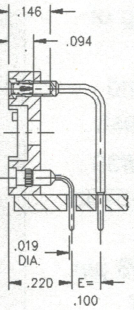

299...11-001

- For components to be mounted perpendicularly to the PCB, such as LED displays.
- Horizontal mount solder tails are available with either .300" (standard) or .100" row spacing.
- Horizontal mount uses M-M# 1103/0903, 1103/1610 or 1103/0904 pins. See page 92 & 93 for details.

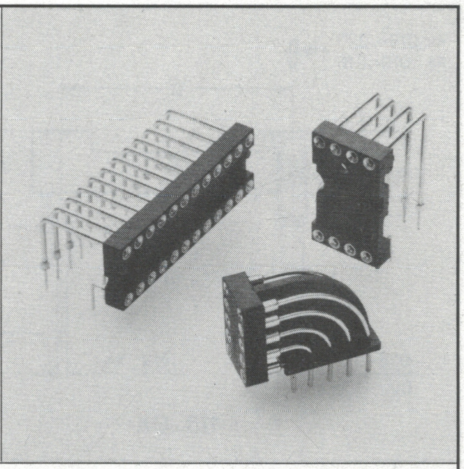

Total no. of pins	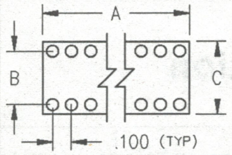			Insulator body (see page 8)	**Horizontal Mount Ordering Information** (Plating: Pin - 200μ" Sn, Contact - 30μ" Au)	
	A	B	C		E=.300	E=.100
6	0.3	0.3	0.4	Fig.30	299-93-306-10-001	299-93-306-11-001
8	0.4	0.3	0.4	Fig.31	299-93-308-10-001	299-93-308-11-001
10	0.5	0.3	0.4	Fig.32	299-93-310-10-001	299-93-310-11-001
12	0.6	0.3	0.4		299-93-312-10-001	299-93-312-11-001
14	0.7	0.3	0.4	Fig.33	299-93-314-10-001	299-93-314-11-001
16	0.8	0.3	0.4	Fig.34	299-93-316-10-001	299-93-316-11-001
18	0.9	0.3	0.4	Fig.35	299-93-318-10-001	299-93-318-11-001
20	1.0	0.3	0.4	Fig.36	299-93-320-10-001	299-93-320-11-001
24	1.2	0.3	0.4	Fig.38	299-93-324-10-001	299-93-324-11-001
8	0.4	0.6	0.7		299-93-608-10-002	
10	0.5	0.6	0.7		299-93-610-10-002	
12	0.6	0.6	0.7		299-93-612-10-002	
14	0.7	0.6	0.7		299-93-614-10-002	
16	0.8	0.6	0.7		299-93-616-10-002	
18	0.9	0.6	0.7		299-93-618-10-002	
20	1.0	0.6	0.7		299-93-620-10-002	
22	1.1	0.6	0.7		299-93-622-10-002	
24	1.2	0.6	0.7	Fig.41	299-93-624-10-002	
26	1.3	0.6	0.7		299-93-626-10-002	
28	1.4	0.6	0.7	Fig.42	299-93-628-10-002	
30	1.5	0.6	0.7		299-93-630-10-002	
32	1.6	0.6	0.7	Fig.43	299-93-632-10-002	
36	1.8	0.6	0.7	Fig.44	299-93-636-10-002	
40	2.0	0.6	0.7	Fig.45	299-93-640-10-002	
10	0.5	0.2	0.3		**Vertical Mount** **10 Pin Display** **Plating: Pin/Contact - 200μ" Sn** **Order As** **299-99-210-12-001800**	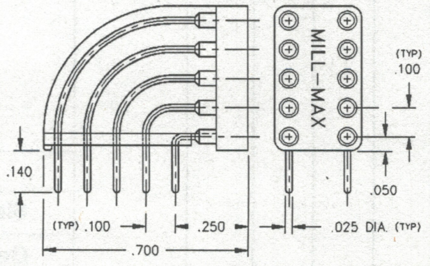 MILL–MAX (TYP) .100 .140 .050 (TYP) .100 .250 .700 .025 DIA. (TYP)

DUAL IN-LINE SOCKETS
Carrier Type
Solder Tail

Series 612

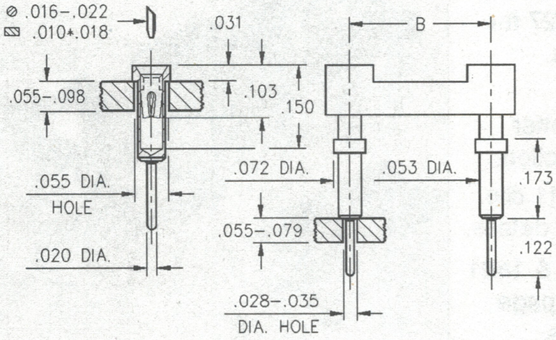

- Convenient way to load loose receptacles on PC board. See below for application details.
- Offers maximum ventilation and better visibility for inspection
- Hi-Rel, 4-finger #30 clip. See page 157 for details.
- Uses Mill-Max #0255 pin receptacle. See page 91 for details.

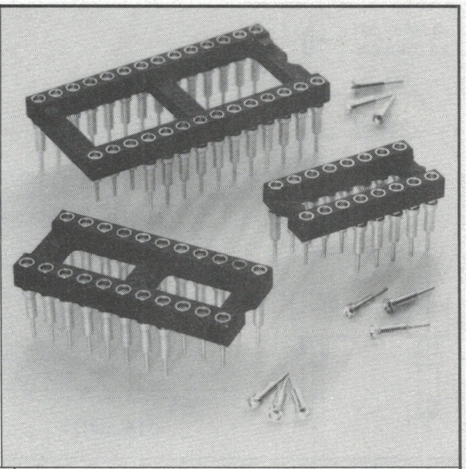

APPLICATION OF DIP/SIP SOCKET CARRIERS

Carrier sockets provide a convenient way of loading groups of receptacles onto a printed circuit board.

A DIP carrier insulator with durable pins is assembled with loose receptacles.

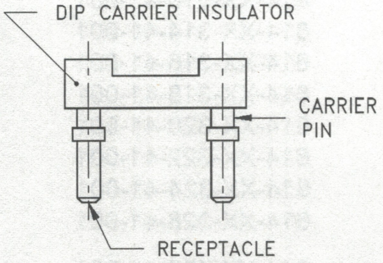

The socket carrier keeps the receptacles fixtured in the PCB during soldering. After soldering, the carrier insulator is removed, leaving behind a low profile socket pattern. In high volume, the carrier can be reloaded with fresh receptacles.

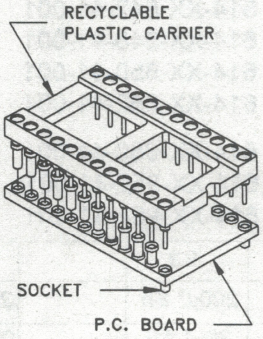

Ordering Information

Total no. of pins	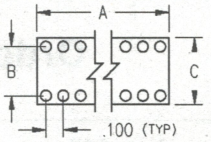			Insulator body (see page 7)	Ordering Information
	A	B	C		
10	0.5	0.2	0.3	Fig.1	612-XX-210-41-001
4	0.2	0.3	0.4	Fig.2	612-XX-304-41-001
6	0.3	0.3	0.4	Fig.3	612-XX-306-41-001
8	0.4	0.3	0.4	Fig.4	612-XX-308-41-001
10	0.5	0.3	0.4	Fig.5	612-XX-310-41-001
14	0.7	0.3	0.4	Fig.6	612-XX-314-41-001
16	0.8	0.3	0.4	Fig.7	612-XX-316-41-001
18	0.9	0.3	0.4	Fig.8	612-XX-318-41-001
20	1.0	0.3	0.4	Fig.9	612-XX-320-41-001
22	1.1	0.3	0.4	Fig.10	612-XX-322-41-001
24	1.2	0.3	0.4	Fig.11	612-XX-324-41-001
28	1.4	0.3	0.4	Fig.12	612-XX-328-41-001
20	1.0	0.4	0.5	Fig.13	612-XX-420-41-001
22	1.1	0.4	0.5	Fig.14	612-XX-422-41-001
24	1.2	0.4	0.5	Fig.15	612-XX-424-41-001
28	1.4	0.4	0.5	Fig.16	612-XX-428-41-001
32	1.6	0.4	0.5	Fig.17	612-XX-432-41-001
24	1.2	0.6	0.7	Fig.18	612-XX-624-41-001
28	1.4	0.6	0.7	Fig.19	612-XX-628-41-001
32	1.6	0.6	0.7	Fig.20	612-XX-632-41-001
36	1.8	0.6	0.7	Fig.21	612-XX-636-41-001
40	2.0	0.6	0.7	Fig.22	612-XX-640-41-001
42	2.1	0.6	0.7	Fig.23	612-XX-642-41-001
48	2.4	0.6	0.7	Fig.24	612-XX-648-41-001
50	2.5	0.6	0.7	Fig.25	612-XX-650-41-001
52	2.6	0.6	0.7	Fig.26	612-XX-652-41-001
50	2.5	0.9	1.0	Fig.27	612-XX-950-41-001
52	2.6	0.9	1.0	Fig.28	612-XX-952-41-001
64	3.2	0.9	1.0	Fig.29	612-XX-964-41-001

SPECIFY PLATING CODE XX=		13	93
Sleeve (Pin)	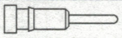	10µ" Au	200µ" Sn
Contact (Clip)		30µ" Au	30µ" Au

DUAL-IN-LINE SOCKETS
Carrier Type
Low Profile

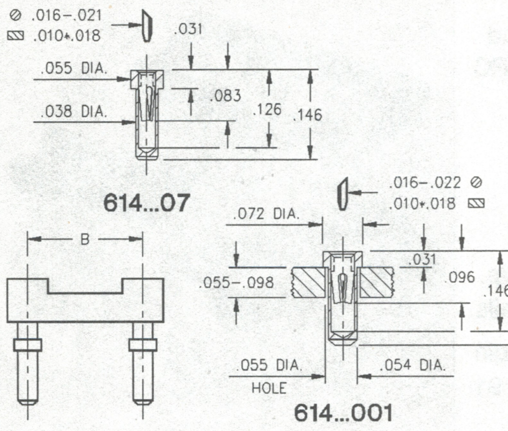

- Convenient way to load loose receptacles on PC board. See page 27 for application details.
- Offers maximum ventilation and better visibility for inspection.
- Hi-Rel, 3-finger #11 clip. See page 155 for details.
- Uses M-M# 1407 & 1401 receptacles. See page 83 & 89 for details.

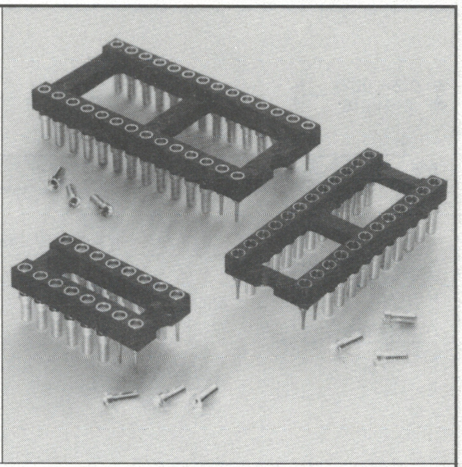

Ordering Information

Total no. of pins	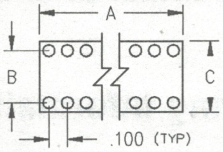 A	B	C	Insulator body (see page 7)	L = .146 (.039 Min. Mounting Hole)	L = .165 (.055 Min. Mounting Hole)
10	0.5	0.2	0.3	Fig.1	614-XX-210-31-007	614-XX-210-41-001
4	0.2	0.3	0.4	Fig.2	614-XX-304-31-007	614-XX-304-41-001
6	0.3	0.3	0.4	Fig.3	614-XX-306-31-007	614-XX-306-41-001
8	0.4	0.3	0.4	Fig.4	614-XX-308-31-007	614-XX-308-41-001
10	0.5	0.3	0.4	Fig.5	614-XX-310-31-007	614-XX-310-41-001
14	0.7	0.3	0.4	Fig.6	614-XX-314-31-007	614-XX-314-41-001
16	0.8	0.3	0.4	Fig.7	614-XX-316-31-007	614-XX-316-41-001
18	0.9	0.3	0.4	Fig.8	614-XX-318-31-007	614-XX-318-41-001
20	1.0	0.3	0.4	Fig.9	614-XX-320-31-007	614-XX-320-41-001
22	1.1	0.3	0.4	Fig.10	614-XX-322-31-007	614-XX-322-41-001
24	1.2	0.3	0.4	Fig.11	614-XX-324-31-007	614-XX-324-41-001
28	1.4	0.3	0.4	Fig.12	614-XX-328-31-007	614-XX-328-41-001
20	1.0	0.4	0.5	Fig.13	614-XX-420-31-007	614-XX-420-41-001
22	1.1	0.4	0.5	Fig.14	614-XX-422-31-007	614-XX-422-41-001
24	1.2	0.4	0.5	Fig.15	614-XX-424-31-007	614-XX-424-41-001
28	1.4	0.4	0.5	Fig.16	614-XX-428-31-007	614-XX-428-41-001
32	1.6	0.4	0.5	Fig.17	614-XX-432-31-007	614-XX-432-41-001
24	1.2	0.6	0.7	Fig.18	614-XX-624-31-007	614-XX-624-41-001
28	1.4	0.6	0.7	Fig.19	614-XX-628-31-007	614-XX-628-41-001
32	1.6	0.6	0.7	Fig.20	614-XX-632-31-007	614-XX-632-41-001
36	1.8	0.6	0.7	Fig.21	614-XX-636-31-007	614-XX-636-41-001
40	2.0	0.6	0.7	Fig.22	614-XX-640-31-007	614-XX-640-41-001
42	2.1	0.6	0.7	Fig.23	614-XX-642-31-007	614-XX-642-41-001
48	2.4	0.6	0.7	Fig.24	614-XX-648-31-007	614-XX-648-41-001
50	2.5	0.6	0.7	Fig.25	614-XX-650-31-007	614-XX-650-41-001
52	2.6	0.6	0.7	Fig.26	614-XX-652-31-007	614-XX-652-41-001
50	2.5	0.9	1.0	Fig.27	614-XX-950-31-007	614-XX-950-41-001
52	2.6	0.9	1.0	Fig.28	614-XX-952-31-007	614-XX-952-41-001
64	3.2	0.9	1.0	Fig.29	614-XX-964-31-007	614-XX-964-41-001

SPECIFY PLATING CODE XX=	93	99
Sleeve (Pin)	200μ" Sn	200μ" Sn
Contact (Clip)	30μ" Au	200μ" Sn

DUAL-IN-LINE SOCKETS
Carrier Type Miniature

Series 614, 605

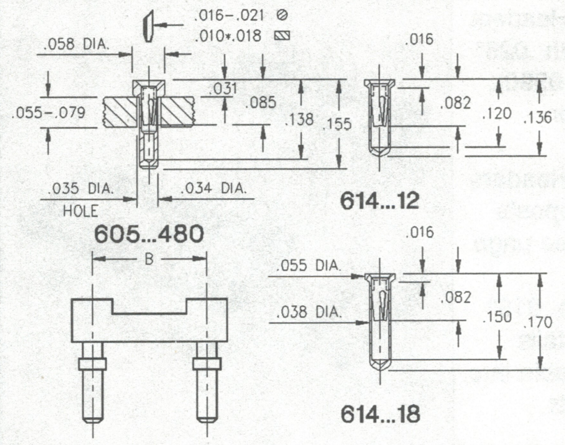

- Convenient way to load loose receptacles on PC board. See page 27 for application details.
- Offers maximum ventilation and better visibility for inspection.
- Hi-Rel, 3-finger #11 clip. See page 155 for details.
- Uses M-M#0548, 0552-1 or 0552-2 receptacles. See page 83 for details.

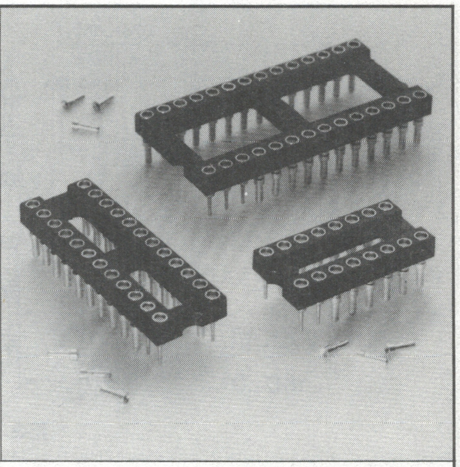

Ordering Information

Total no. of pins	A	B	C	Insulator body (see page 7)	L = .155 (.035 Min. Mounting Hole)	L = .136 (.039 Min. Mounting Hole)	L = .170 (.039 Min. Mounting Hole)
	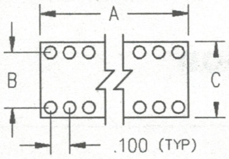						
10	0.5	0.2	0.3	Fig.1	605-XX-210-11-480	614-XX-210-31-012	614-XX-210-31-018
4	0.2	0.3	0.4	Fig.2	605-XX-304-11-480	614-XX-304-31-012	614-XX-304-31-018
6	0.3	0.3	0.4	Fig.3	605-XX-306-11-480	614-XX-306-31-012	614-XX-306-31-018
8	0.4	0.3	0.4	Fig.4	605-XX-308-11-480	614-XX-308-31-012	614-XX-308-31-018
10	0.5	0.3	0.4	Fig.5	605-XX-310-11-480	614-XX-310-31-012	614-XX-310-31-018
14	0.7	0.3	0.4	Fig.6	605-XX-314-11-480	614-XX-314-31-012	614-XX-314-31-018
16	0.8	0.3	0.4	Fig.7	605-XX-316-11-480	614-XX-316-31-012	614-XX-316-31-018
18	0.9	0.3	0.4	Fig.8	605-XX-318-11-480	614-XX-318-31-012	614-XX-318-31-018
20	1.0	0.3	0.4	Fig.9	605-XX-320-11-480	614-XX-320-31-012	614-XX-320-31-018
22	1.1	0.3	0.4	Fig.10	605-XX-322-11-480	614-XX-322-31-012	614-XX-322-31-018
24	1.2	0.3	0.4	Fig.11	605-XX-324-11-480	614-XX-324-31-012	614-XX-324-31-018
28	1.4	0.3	0.4	Fig.12	605-XX-328-11-480	614-XX-328-31-012	614-XX-328-31-018
20	1.0	0.4	0.5	Fig.13	605-XX-420-11-480	614-XX-420-31-012	614-XX-420-31-018
22	1.1	0.4	0.5	Fig.14	605-XX-422-11-480	614-XX-422-31-012	614-XX-422-31-018
24	1.2	0.4	0.5	Fig.15	605-XX-424-11-480	614-XX-424-31-012	614-XX-424-31-018
28	1.4	0.4	0.5	Fig.16	605-XX-428-11-480	614-XX-428-31-012	614-XX-428-31-018
32	1.6	0.4	0.5	Fig.17	605-XX-432-11-480	614-XX-432-31-012	614-XX-432-31-018
24	1.2	0.6	0.7	Fig.18	605-XX-624-11-480	614-XX-624-31-012	614-XX-624-31-018
28	1.4	0.6	0.7	Fig.19	605-XX-628-11-480	614-XX-628-31-012	614-XX-628-31-018
32	1.6	0.6	0.7	Fig.20	605-XX-632-11-480	614-XX-632-31-012	614-XX-632-31-018
36	1.8	0.6	0.7	Fig.21	605-XX-636-11-480	614-XX-636-31-012	614-XX-636-31-018
40	2.0	0.6	0.7	Fig.22	605-XX-640-11-480	614-XX-640-31-012	614-XX-640-31-018
42	2.1	0.6	0.7	Fig.23	605-XX-642-11-480	614-XX-642-31-012	614-XX-642-31-018
48	2.4	0.6	0.7	Fig.24	605-XX-648-11-480	614-XX-648-31-012	614-XX-648-31-018
50	2.5	0.6	0.7	Fig.25	605-XX-650-11-480	614-XX-650-31-012	614-XX-650-31-018
52	2.6	0.6	0.7	Fig.26	605-XX-652-11-480	614-XX-652-31-012	614-XX-652-31-018
50	2.5	0.9	1.0	Fig.27	605-XX-950-11-480	614-XX-950-31-012	614-XX-950-31-018
52	2.6	0.9	1.0	Fig.28	605-XX-952-11-480	614-XX-952-31-012	614-XX-952-31-018
64	3.2	0.9	1.0	Fig.29	605-XX-964-11-480	614-XX-964-31-012	614-XX-964-31-018

SPECIFY PLATING CODE XX=		93	99
Sleeve (Pin)	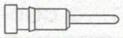	200µ" Sn	200µ" Sn
Contact (Clip)		30µ" Au	200µ" Sn

DUAL-IN-LINE PIN HEADERS
Solder Tail and Wrapost
Open Frame

Series 150, 153

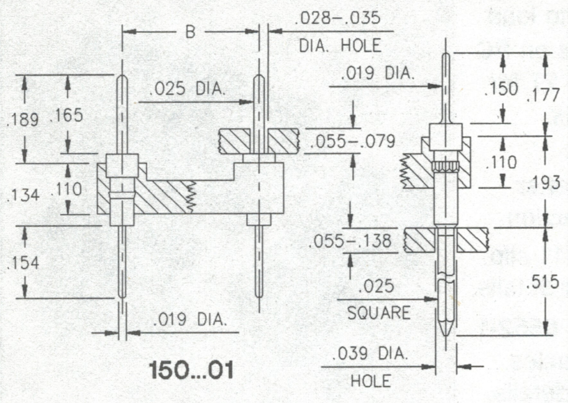

150...01

153...01

- Series 150 DIL Headers are equipped with .025" dia. pins (M-M# 0290). See page 124 for details.
- Series 153 DIL Headers have 3-level wraposts (M-M# 5301). See page 134 for details.
- Both series have .019" diameter solder tails which are pluggable into standard contacts.

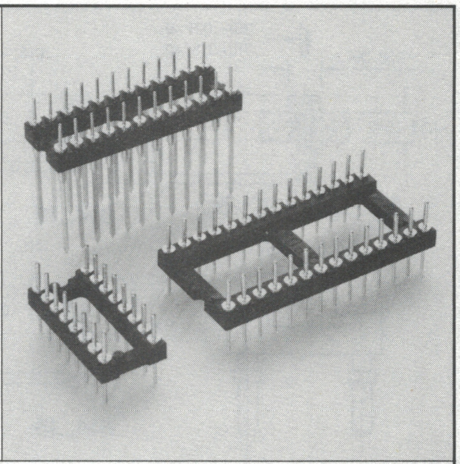

Total no. of pins	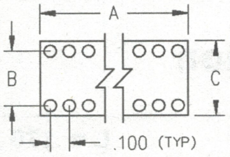			Insulator body (see page 7)	Ordering Information	
	A	B	C		Solder Tail	3 Level Wrapost
10	0.5	0.2	0.3	Fig.1	150-XX-210-00-001	153-XX-210-00-001
4	0.2	0.3	0.4	Fig.2	150-XX-304-00-001	153-XX-304-00-001
6	0.3	0.3	0.4	Fig.3	150-XX-306-00-001	153-XX-306-00-001
8	0.4	0.3	0.4	Fig.4	150-XX-308-00-001	153-XX-308-00-001
10	0.5	0.3	0.4	Fig.5	150-XX-310-00-001	153-XX-310-00-001
14	0.7	0.3	0.4	Fig.6	150-XX-314-00-001	153-XX-314-00-001
16	0.8	0.3	0.4	Fig.7	150-XX-316-00-001	153-XX-316-00-001
18	0.9	0.3	0.4	Fig.8	150-XX-318-00-001	153-XX-318-00-001
20	1.0	0.3	0.4	Fig.9	150-XX-320-00-001	153-XX-320-00-001
22	1.1	0.3	0.4	Fig.10	150-XX-322-00-001	153-XX-322-00-001
24	1.2	0.3	0.4	Fig.11	150-XX-324-00-001	153-XX-324-00-001
28	1.4	0.3	0.4	Fig.12	150-XX-328-00-001	153-XX-328-00-001
20	1.0	0.4	0.5	Fig.13	150-XX-420-00-001	153-XX-420-00-001
22	1.1	0.4	0.5	Fig.14	150-XX-422-00-001	153-XX-422-00-001
24	1.2	0.4	0.5	Fig.15	150-XX-424-00-001	153-XX-424-00-001
28	1.4	0.4	0.5	Fig.16	150-XX-428-00-001	153-XX-428-00-001
32	1.6	0.4	0.5	Fig.17	150-XX-432-00-001	153-XX-432-00-001
24	1.2	0.6	0.7	Fig.18	150-XX-624-00-001	153-XX-624-00-001
28	1.4	0.6	0.7	Fig.19	150-XX-628-00-001	153-XX-628-00-001
32	1.6	0.6	0.7	Fig.20	150-XX-632-00-001	153-XX-632-00-001
36	1.8	0.6	0.7	Fig.21	150-XX-636-00-001	153-XX-636-00-001
40	2.0	0.6	0.7	Fig.22	150-XX-640-00-001	153-XX-640-00-001
42	2.1	0.6	0.7	Fig.23	150-XX-642-00-001	153-XX-642-00-001
48	2.4	0.6	0.7	Fig.24	150-XX-648-00-001	153-XX-648-00-001
50	2.5	0.6	0.7	Fig.25	150-XX-650-00-001	153-XX-650-00-001
52	2.6	0.6	0.7	Fig.26	150-XX-652-00-001	153-XX-652-00-001
50	2.5	0.9	1.0	Fig.27	150-XX-950-00-001	153-XX-950-00-001
52	2.6	0.9	1.0	Fig.28	150-XX-952-00-001	153-XX-952-00-001
64	3.2	0.9	1.0	Fig.29	150-XX-964-00-001	153-XX-964-00-001

SPECIFY PLATING CODE XX=	10	90
Pin Plating	10µ" Au	200µ" Sn

DUAL-IN-LINE SLOTTED HEADERS
Solder Tail and Wrapost
Open Frame

Series 160, 162, 163

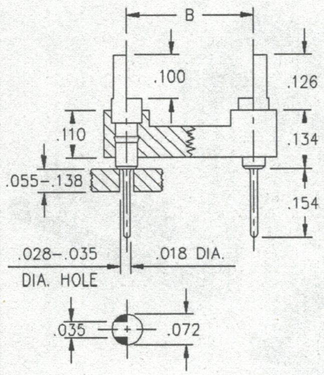

160...01

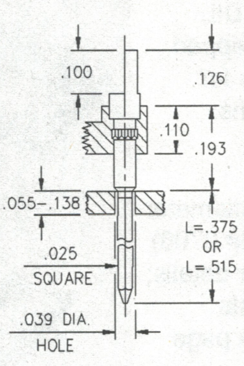

162/163...01

- Series 160, 162, 163 DIL Headers are equipped with slotted heads to accept wires or component leads.
- Terminations are pluggable .018" diameter solder tails (M-M# 0282), see page 125 for details; or two-level wraposts, (M-M# 1106) see page 135 for details.

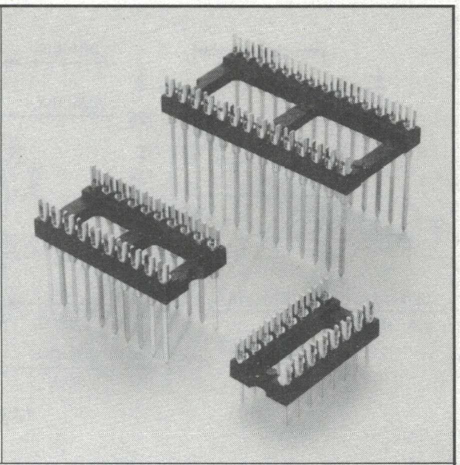

Total no. of pins	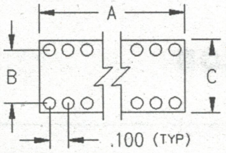			Insulator body (see page 7)	Ordering Information		
	A	B	C		Solder Tail	2 Level Wrapost L = .375	3 Level Wrapost L = .515
10	0.5	0.2	0.3	Fig.1	160-XX-210-00-001	162-XX-210-00-001	163-XX-210-00-001
4	0.2	0.3	0.4	Fig.2	160-XX-304-00-001	162-XX-304-00-001	163-XX-304-00-001
6	0.3	0.3	0.4	Fig.3	160-XX-306-00-001	162-XX-306-00-001	163-XX-306-00-001
8	0.4	0.3	0.4	Fig.4	160-XX-308-00-001	162-XX-308-00-001	163-XX-308-00-001
10	0.5	0.3	0.4	Fig.5	160-XX-310-00-001	162-XX-310-00-001	163-XX-310-00-001
14	0.7	0.3	0.4	Fig.6	160-XX-314-00-001	162-XX-314-00-001	163-XX-314-00-001
16	0.8	0.3	0.4	Fig.7	160-XX-316-00-001	162-XX-316-00-001	163-XX-316-00-001
18	0.9	0.3	0.4	Fig.8	160-XX-318-00-001	162-XX-318-00-001	163-XX-318-00-001
20	1.0	0.3	0.4	Fig.9	160-XX-320-00-001	162-XX-320-00-001	163-XX-320-00-001
22	1.0	0.3	0.4	Fig.10	160-XX-322-00-001	162-XX-322-00-001	163-XX-322-00-001
24	1.2	0.3	0.4	Fig.11	160-XX-324-00-001	162-XX-324-00-001	163-XX-324-00-001
28	1.4	0.3	0.4	Fig.12	160-XX-328-00-001	162-XX-328-00-001	163-XX-328-00-001
20	1.0	0.4	0.5	Fig.13	160-XX-420-00-001	162-XX-420-00-001	163-XX-420-00-001
22	1.1	0.4	0.5	Fig.14	160-XX-422-00-001	162-XX-422-00-001	163-XX-422-00-001
24	1.2	0.4	0.5	Fig.15	160-XX-424-00-001	162-XX-424-00-001	163-XX-424-00-001
28	1.4	0.4	0.5	Fig.16	160-XX-428-00-001	162-XX-428-00-001	163-XX-428-00-001
32	1.6	0.4	0.5	Fig.17	160-XX-432-00-001	162-XX-432-00-001	163-XX-432-00-001
24	1.2	0.6	0.7	Fig.18	160-XX-624-00-001	162-XX-624-00-001	163-XX-624-00-001
28	1.4	0.6	0.7	Fig.19	160-XX-628-00-001	162-XX-628-00-001	163-XX-628-00-001
32	1.6	0.6	0.7	Fig.20	160-XX-632-00-001	162-XX-632-00-001	163-XX-632-00-001
36	1.8	0.6	0.7	Fig.21	160-XX-636-00-001	162-XX-636-00-001	163-XX-636-00-001
40	2.0	0.6	0.7	Fig.22	160-XX-640-00-001	162-XX-640-00-001	163-XX-640-00-001
42	2.1	0.6	0.7	Fig.23	160-XX-642-00-001	162-XX-642-00-001	163-XX-642-00-001
48	2.4	0.6	0.7	Fig.24	160-XX-648-00-001	162-XX-648-00-001	163-XX-648-00-001
50	2.5	0.6	0.7	Fig.25	160-XX-650-00-001	162-XX-650-00-001	163-XX-650-00-001
52	2.6	0.6	0.7	Fig.26	160-XX-652-00-001	162-XX-652-00-001	163-XX-652-00-001
50	2.5	0.9	1.0	Fig.27	160-XX-950-00-001	162-XX-950-00-001	163-XX-950-00-001
52	2.6	0.9	1.0	Fig.28	160-XX-952-00-001	162-XX-952-00-001	163-XX-952-00-001
64	3.2	0.9	1.0	Fig.29	160-XX-964-00-001	162-XX-964-00-001	163-XX-964-00-001

SPECIFY PLATING CODE XX=	10	90
Pin Plating 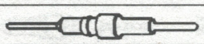	10µ" Au	200µ" Sn

DUAL-IN-LINE TURRET HEADERS
Solder Tail and Wrapost
Open Frame

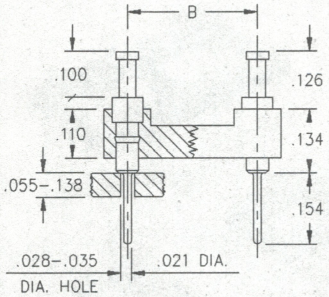

170...01

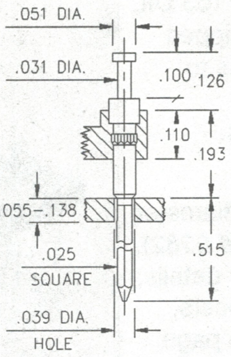

173...01

- Series 170, 173 DIL Headers are equipped with turret heads for wiring applications.
- Terminations are pluggable .021” diameter solder tails (M-M# 0700) see page 125 for details; or 3-level wraposts (M-M# 0730) see page 135 for details.

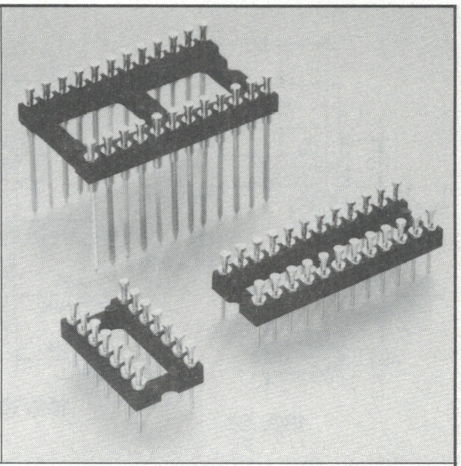

Total no. of pins	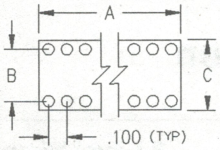			Insulator body (see page 7)	Ordering Information	
	A	B	C		Solder Tail	3 Level Wrapost
10	0.5	0.2	0.3	Fig.1	170-XX-210-00-001	173-XX-210-00-001
4	0.2	0.3	0.4	Fig.2	170-XX-304-00-001	173-XX-304-00-001
6	0.3	0.3	0.4	Fig.3	170-XX-306-00-001	173-XX-306-00-001
8	0.4	0.3	0.4	Fig.4	170-XX-308-00-001	173-XX-308-00-001
10	0.5	0.3	0.4	Fig.5	170-XX-310-00-001	173-XX-310-00-001
14	0.7	0.3	0.4	Fig.6	170-XX-314-00-001	173-XX-314-00-001
16	0.8	0.3	0.4	Fig.7	170-XX-316-00-001	173-XX-316-00-001
18	0.9	0.3	0.4	Fig.8	170-XX-318-00-001	173-XX-318-00-001
20	1.0	0.3	0.4	Fig.9	170-XX-320-00-001	173-XX-320-00-001
22	1.1	0.3	0.4	Fig.10	170-XX-322-00-001	173-XX-322-00-001
24	1.2	0.3	0.4	Fig.11	170-XX-324-00-001	173-XX-324-00-001
28	1.4	0.3	0.4	Fig.12	170-XX-328-00-001	173-XX-328-00-001
20	1.0	0.4	0.5	Fig.13	170-XX-420-00-001	173-XX-420-00-001
22	1.1	0.4	0.5	Fig.14	170-XX-422-00-001	173-XX-422-00-001
24	1.2	0.4	0.5	Fig.15	170-XX-424-00-001	173-XX-424-00-001
28	1.4	0.4	0.5	Fig.16	170-XX-428-00-001	173-XX-428-00-001
32	1.6	0.4	0.5	Fig.17	170-XX-432-00-001	173-XX-432-00-001
24	1.2	0.6	0.7	Fig.18	170-XX-624-00-001	173-XX-624-00-001
28	1.4	0.6	0.7	Fig.19	170-XX-628-00-001	173-XX-628-00-001
32	1.6	0.6	0.7	Fig.20	170-XX-632-00-001	173-XX-632-00-001
36	1.8	0.6	0.7	Fig.21	170-XX-636-00-001	173-XX-636-00-001
40	2.0	0.6	0.7	Fig.22	170-XX-640-00-001	173-XX-640-00-001
42	2.1	0.6	0.7	Fig.23	170-XX-642-00-001	173-XX-642-00-001
48	2.4	0.6	0.7	Fig.24	170-XX-648-00-001	173-XX-648-00-001
50	2.5	0.6	0.7	Fig.25	170-XX-650-00-001	173-XX-650-00-001
52	2.6	0.6	0.7	Fig.26	170-XX-652-00-001	173-XX-652-00-001
50	2.5	0.9	1.0	Fig.27	170-XX-950-00-001	173-XX-950-00-001
52	2.6	0.9	1.0	Fig.28	170-XX-952-00-001	173-XX-952-00-001
64	3.2	0.9	1.0	Fig.29	170-XX-964-00-001	173-XX-964-00-001

SPECIFY PLATING CODE XX=	10	90
Pin Plating	10μ” Au	200μ” Sn

DUAL-IN-LINE SOLDER CUP HEADERS
Solder Tail and Wrapost
Open Frame

Series 180, 182, 183

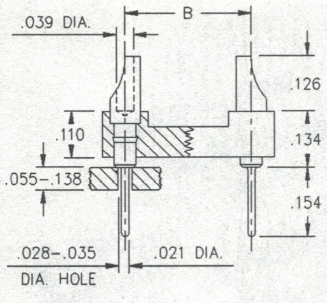

180...01

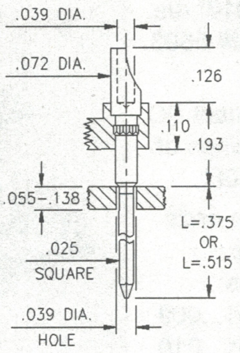

182/183...01

- Series 180, 182, 183 DIL Headers are equipped with solder cups for wiring applications.
- Terminations are pluggable .021" diameter solder tails (M-M# 8000), see page 125 for details; or 2 & 3-level wraposts, (M-M# 8301) see page 134 for details.

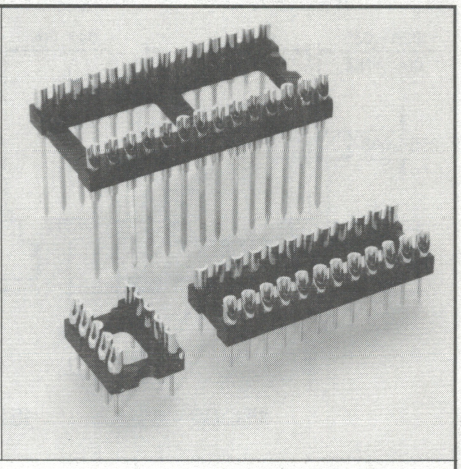

Total no. of pins	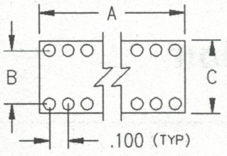			Insulator body (see page 7)	Ordering Information		
	A	B	C		Solder Tail	2 Level Wrapost L = .375	3 Level Wrapost L = .515
10	0.5	0.2	0.3	Fig.1	180-XX-210-00-001	182-XX-210-00-001	183-XX-210-00-001
4	0.2	0.3	0.4	Fig.2	180-XX-304-00-001	182-XX-304-00-001	183-XX-304-00-001
6	0.3	0.3	0.4	Fig.3	180-XX-306-00-001	182-XX-306-00-001	183-XX-306-00-001
8	0.4	0.3	0.4	Fig.4	180-XX-308-00-001	182-XX-308-00-001	183-XX-308-00-001
10	0.5	0.3	0.4	Fig.5	180-XX-310-00-001	182-XX-310-00-001	183-XX-310-00-001
14	0.7	0.3	0.4	Fig.6	180-XX-314-00-001	182-XX-314-00-001	183-XX-314-00-001
16	0.8	0.3	0.4	Fig.7	180-XX-316-00-001	182-XX-316-00-001	183-XX-316-00-001
18	0.9	0.3	0.4	Fig.8	180-XX-318-00-001	182-XX-318-00-001	183-XX-318-00-001
20	1.0	0.3	0.4	Fig.9	180-XX-320-00-001	182-XX-320-00-001	183-XX-320-00-001
22	1.1	0.3	0.4	Fig.10	180-XX-322-00-001	182-XX-322-00-001	183-XX-322-00-001
24	1.2	0.3	0.4	Fig.11	180-XX-324-00-001	182-XX-324-00-001	183-XX-324-00-001
28	1.4	0.3	0.4	Fig.12	180-XX-328-00-001	182-XX-328-00-001	183-XX-328-00-001
20	1.0	0.4	0.5	Fig.13	180-XX-420-00-001	182-XX-420-00-001	183-XX-420-00-001
22	1.1	0.4	0.5	Fig.14	180-XX-422-00-001	182-XX-422-00-001	183-XX-422-00-001
24	1.2	0.4	0.5	Fig.15	180-XX-424-00-001	182-XX-424-00-001	183-XX-424-00-001
28	1.4	0.4	0.5	Fig.16	180-XX-428-00-001	182-XX-428-00-001	183-XX-428-00-001
32	1.6	0.4	0.5	Fig.17	180-XX-432-00-001	182-XX-432-00-001	183-XX-432-00-001
24	1.2	0.6	0.7	Fig.18	180-XX-624-00-001	182-XX-624-00-001	183-XX-624-00-001
28	1.4	0.6	0.7	Fig.19	180-XX-628-00-001	182-XX-628-00-001	183-XX-628-00-001
32	1.6	0.6	0.7	Fig.20	180-XX-632-00-001	182-XX-632-00-001	183-XX-632-00-001
36	1.8	0.6	0.7	Fig.21	180-XX-636-00-001	182-XX-636-00-001	183-XX-636-00-001
40	2.0	0.6	0.7	Fig.22	180-XX-640-00-001	182-XX-640-00-001	183-XX-640-00-001
42	2.1	0.6	0.7	Fig.23	180-XX-642-00-001	182-XX-642-00-001	183-XX-642-00-001
48	2.4	0.6	0.7	Fig.24	180-XX-648-00-001	182-XX-648-00-001	183-XX-648-00-001
50	2.5	0.6	0.7	Fig.25	180-XX-650-00-001	182-XX-650-00-001	183-XX-650-00-001
52	2.6	0.6	0.7	Fig.26	180-XX-652-00-001	182-XX-652-00-001	183-XX-652-00-001
50	2.5	0.9	1.0	Fig.27	180-XX-950-00-001	182-XX-950-00-001	183-XX-950-00-001
52	2.6	0.9	1.0	Fig.28	180-XX-952-00-001	182-XX-952-00-001	183-XX-952-00-001
64	3.2	0.9	1.0	Fig.29	180-XX-964-00-001	182-XX-964-00-001	183-XX-964-00-001

SPECIFY PLATING CODE XX=	10	90
Pin Plating	10µ" Au	200µ" Sn

DUAL-IN-LINE PIN HEADERS
Interconnect
Open Frame

Series 151

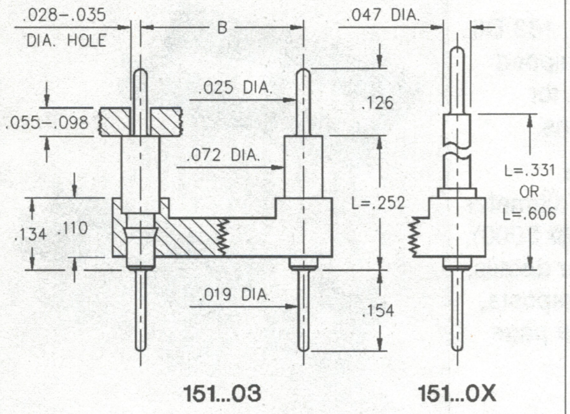

- Combine .025" dia. pins with pluggable .019" dia. solder tails. (M-M# 5503, 5504, or 5505).
- Used to interconnect PC boards with spacings of .252", .331" or .606".
- .019" pins at both ends are also available. Specify as follows:
  for L=.252", 151...009
  for L=.331", 151...010
  for L=.606", 151...011

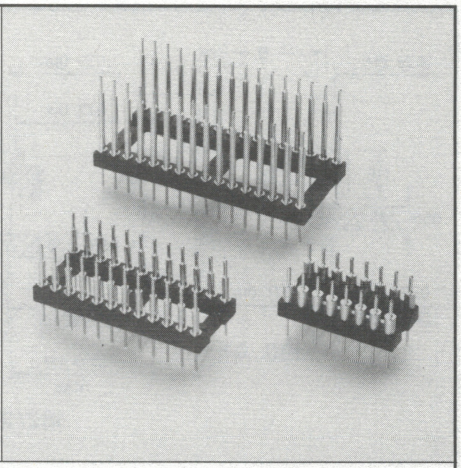

Ordering Information

Total no. of pins	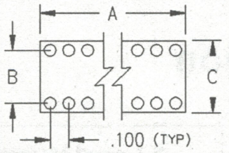 A	B	C	Insulator body (see page 7)	L = .252	L = .331	L = .606
10	0.5	0.2	0.3	Fig.1	151-XX-210-00-003	151-XX-210-00-004	151-XX-210-00-005
4	0.2	0.3	0.4	Fig.2	151-XX-304-00-003	151-XX-304-00-004	151-XX-304-00-005
6	0.3	0.3	0.4	Fig.3	151-XX-306-00-003	151-XX-306-00-004	151-XX-306-00-005
8	0.4	0.3	0.4	Fig.4	151-XX-308-00-003	151-XX-308-00-004	151-XX-308-00-005
10	0.5	0.3	0.4	Fig.5	151-XX-310-00-003	151-XX-310-00-004	151-XX-310-00-005
14	0.7	0.3	0.4	Fig.6	151-XX-314-00-003	151-XX-314-00-004	151-XX-314-00-005
16	0.8	0.3	0.4	Fig.7	151-XX-316-00-003	151-XX-316-00-004	151-XX-316-00-005
18	0.9	0.3	0.4	Fig.8	151-XX-318-00-003	151-XX-318-00-004	151-XX-318-00-005
20	1.0	0.3	0.4	Fig.9	151-XX-320-00-003	151-XX-320-00-004	151-XX-320-00-005
22	1.1	0.3	0.4	Fig.10	151-XX-322-00-003	151-XX-322-00-004	151-XX-322-00-005
24	1.2	0.3	0.4	Fig.11	151-XX-324-00-003	151-XX-324-00-004	151-XX-324-00-005
28	1.4	0.3	0.4	Fig.12	151-XX-328-00-003	151-XX-328-00-004	151-XX-328-00-005
20	1.0	0.4	0.5	Fig.13	151-XX-420-00-003	151-XX-420-00-004	151-XX-420-00-005
22	1.1	0.4	0.5	Fig.14	151-XX-422-00-003	151-XX-422-00-004	151-XX-422-00-005
24	1.2	0.4	0.5	Fig.15	151-XX-424-00-003	151-XX-424-00-004	151-XX-424-00-005
28	1.4	0.4	0.5	Fig.16	151-XX-428-00-003	151-XX-428-00-004	151-XX-428-00-005
32	1.6	0.4	0.5	Fig.17	151-XX-432-00-003	151-XX-432-00-004	151-XX-432-00-005
24	1.2	0.6	0.7	Fig.18	151-XX-624-00-003	151-XX-624-00-004	151-XX-624-00-005
28	1.4	0.6	0.7	Fig.19	151-XX-628-00-003	151-XX-628-00-004	151-XX-628-00-005
32	1.6	0.6	0.7	Fig.20	151-XX-632-00-003	151-XX-632-00-004	151-XX-632-00-005
36	1.8	0.6	0.7	Fig.21	151-XX-636-00-003	151-XX-636-00-004	151-XX-636-00-005
40	2.0	0.6	0.7	Fig.22	151-XX-640-00-003	151-XX-640-00-004	151-XX-640-00-005
42	2.1	0.6	0.7	Fig.23	151-XX-642-00-003	151-XX-642-00-004	151-XX-642-00-005
48	2.4	0.6	0.7	Fig.24	151-XX-648-00-003	151-XX-648-00-004	151-XX-648-00-005
50	2.5	0.6	0.7	Fig.25	151-XX-650-00-003	151-XX-650-00-004	151-XX-650-00-005
52	2.6	0.6	0.7	Fig.26	151-XX-652-00-003	151-XX-652-00-004	151-XX-652-00-005
50	2.5	0.9	1.0	Fig.27	151-XX-950-00-003	151-XX-950-00-004	151-XX-950-00-005
52	2.6	0.9	1.0	Fig.28	151-XX-952-00-003	151-XX-952-00-004	151-XX-952-00-005
64	3.2	0.9	1.0	Fig.29	151-XX-964-00-003	151-XX-964-00-004	151-XX-964-00-005

SPECIFY PLATING CODE XX=	10	90			
Pin Plating	10µ" Au	200µ" Sn			

DUAL-IN-LINE PIN HEADERS
Interconnect
Open Frame

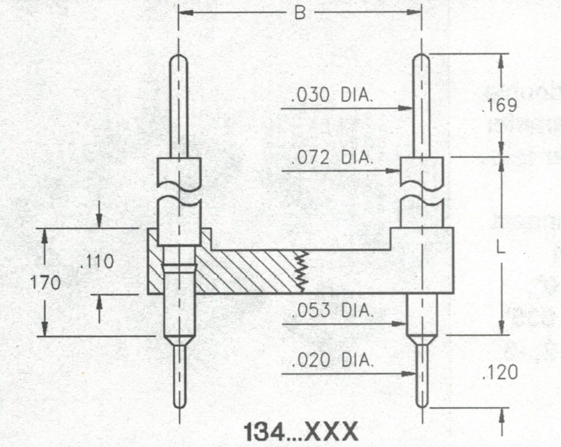

134...XXX

- Series 134 DIL Headers combine .030" pins with pluggable .020" solder tails (M-M#3402, 3401, 3405, 3400 or 3410). See page 124 for details.
- Used to interconnect PC boards with spacings of .190", .236", .315", .605" or 1.070".

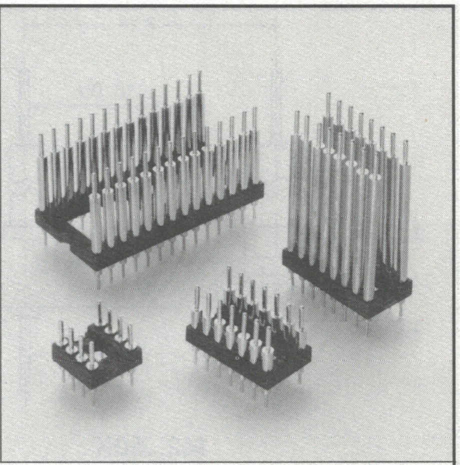

Ordering Information

Total no. of pins	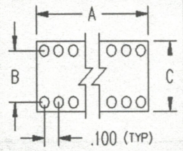			Insulator body (see page 7)	L = .190	L = .236	L = .315	L = .605	L = 1.070
	A	B	C						
10	0.5	0.2	0.3	Fig.1	134-XX-210-00-020	134-XX-210-00-010	134-XX-210-00-050	134-XX-210-00-000	134-XX-210-00-100
4	0.2	0.3	0.4	Fig.2	134-XX-304-00-020	134-XX-304-00-010	134-XX-304-00-050	134-XX-304-00-000	134-XX-304-00-100
6	0.3	0.3	0.4	Fig.3	134-XX-306-00-020	134-XX-306-00-010	134-XX-306-00-050	134-XX-306-00-000	134-XX-306-00-100
8	0.4	0.3	0.4	Fig.4	134-XX-308-00-020	134-XX-308-00-010	134-XX-308-00-050	134-XX-308-00-000	134-XX-308-00-100
10	0.5	0.3	0.4	Fig.5	134-XX-310-00-020	134-XX-310-00-010	134-XX-310-00-050	134-XX-310-00-000	134-XX-310-00-100
14	0.7	0.3	0.4	Fig.6	134-XX-314-00-020	134-XX-314-00-010	134-XX-314-00-050	134-XX-314-00-000	134-XX-314-00-100
16	0.8	0.3	0.4	Fig.7	134-XX-316-00-020	134-XX-316-00-010	134-XX-316-00-050	134-XX-316-00-000	134-XX-316-00-100
18	0.9	0.3	0.4	Fig.8	134-XX-318-00-020	134-XX-318-00-010	134-XX-318-00-050	134-XX-318-00-000	134-XX-318-00-100
20	1.0	0.3	0.4	Fig.9	134-XX-320-00-020	134-XX-320-00-010	134-XX-320-00-050	134-XX-320-00-000	134-XX-320-00-100
22	1.1	0.3	0.4	Fig.10	134-XX-322-00-020	134-XX-322-00-010	134-XX-322-00-050	134-XX-322-00-000	134-XX-322-00-100
24	1.2	0.3	0.4	Fig.11	134-XX-324-00-020	134-XX-324-00-010	134-XX-324-00-050	134-XX-324-00-000	134-XX-324-00-100
28	1.4	0.3	0.4	Fig.12	134-XX-328-00-020	134-XX-328-00-010	134-XX-328-00-050	134-XX-328-00-000	134-XX-328-00-100
20	1.0	0.4	0.5	Fig.13	134-XX-420-00-020	134-XX-420-00-010	134-XX-420-00-050	134-XX-420-00-000	134-XX-420-00-100
22	1.1	0.4	0.5	Fig.14	134-XX-422-00-020	134-XX-422-00-010	134-XX-422-00-050	134-XX-422-00-000	134-XX-422-00-100
24	1.2	0.4	0.5	Fig.15	134-XX-424-00-020	134-XX-424-00-010	134-XX-424-00-050	134-XX-424-00-000	134-XX-424-00-100
28	1.4	0.4	0.5	Fig.16	134-XX-428-00-020	134-XX-428-00-010	134-XX-428-00-050	134-XX-428-00-000	134-XX-428-00-100
32	1.6	0.4	0.5	Fig.17	134-XX-432-00-020	134-XX-432-00-010	134-XX-432-00-050	134-XX-432-00-000	134-XX-432-00-100
24	1.2	0.6	0.7	Fig.18	134-XX-624-00-020	134-XX-624-00-010	134-XX-624-00-050	134-XX-624-00-000	134-XX-624-00-100
28	1.4	0.6	0.7	Fig.19	134-XX-628-00-020	134-XX-628-00-010	134-XX-628-00-050	134-XX-628-00-000	134-XX-628-00-100
32	1.6	0.6	0.7	Fig.20	134-XX-632-00-020	134-XX-632-00-010	134-XX-632-00-050	134-XX-632-00-000	134-XX-632-00-100
36	1.8	0.6	0.7	Fig.21	134-XX-636-00-020	134-XX-636-00-010	134-XX-636-00-050	134-XX-636-00-000	134-XX-636-00-100
40	2.0	0.6	0.7	Fig.22	134-XX-640-00-020	134-XX-640-00-010	134-XX-640-00-050	134-XX-640-00-000	134-XX-640-00-100
42	2.1	0.6	0.7	Fig.23	134-XX-642-00-020	134-XX-642-00-010	134-XX-642-00-050	134-XX-642-00-000	134-XX-642-00-100
48	2.4	0.6	0.7	Fig.24	134-XX-648-00-020	134-XX-648-00-010	134-XX-648-00-050	134-XX-648-00-000	134-XX-648-00-100
50	2.5	0.6	0.7	Fig.25	134-XX-650-00-020	134-XX-650-00-010	134-XX-650-00-050	134-XX-650-00-000	134-XX-650-00-100
52	2.6	0.6	0.7	Fig.26	134-XX-652-00-020	134-XX-652-00-010	134-XX-652-00-050	134-XX-652-00-000	134-XX-652-00-100
50	2.5	0.9	1.0	Fig.27	134-XX-950-00-020	134-XX-950-00-010	134-XX-950-00-050	134-XX-950-00-000	134-XX-950-00-100
52	2.6	0.9	1.0	Fig.28	134-XX-952-00-020	134-XX-952-00-010	134-XX-952-00-050	134-XX-952-00-000	134-XX-952-00-100
64	3.2	0.9	1.0	Fig.29	134-XX-964-00-020	134-XX-964-00-010	134-XX-964-00-050	134-XX-964-00-000	134-XX-964-00-100

SPECIFY PLATING CODE XX=	10	90
Pin Plating 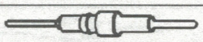	10µ" Au	200µ" Sn

DUAL-IN-LINE HEADERS
Interconnect
Open Frame

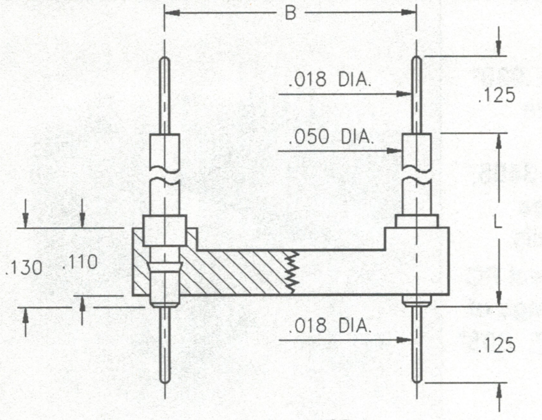

142...59X

- Series 142 Pin Headers have double ended .018" diameter pluggable solder tails.
- Used to interconnect PC Boards with spacings of .210", .335", .585" or .835". (MM# 4259-1, -2, -3 or -4 pin).

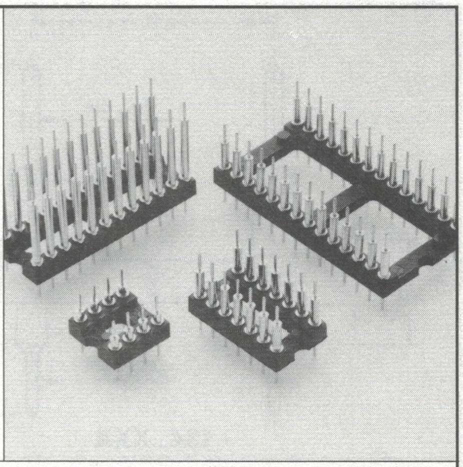

Total no. of pins	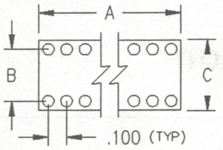			Insulator body (see page 7)	**Ordering Information**			
	A	B	C		L=.210	L=.335	L=.585	L=.835
6	0.3	0.3	0.4	Fig.3	142-XX-306-00-591	142-XX-306-00-592	142-XX-306-00-593	142-XX-306-00-594
8	0.4	0.3	0.4	Fig.4	142-XX-308-00-591	142-XX-308-00-592	142-XX-308-00-593	142-XX-308-00-594
14	0.7	0.3	0.4	Fig.6	142-XX-314-00-591	142-XX-314-00-592	142-XX-314-00-593	142-XX-314-00-594
16	0.8	0.3	0.4	Fig.7	142-XX-316-00-591	142-XX-316-00-592	142-XX-316-00-593	142-XX-316-00-594
18	0.9	0.3	0.4	Fig.8	142-XX-318-00-591	142-XX-318-00-592	142-XX-318-00-593	142-XX-318-00-594
20	1.0	0.3	0.4	Fig.9	142-XX-320-00-591	142-XX-320-00-592	142-XX-320-00-593	142-XX-320-00-594
24	1.2	0.3	0.4	Fig.11	142-XX-324-00-591	142-XX-324-00-592	142-XX-324-00-593	142-XX-324-00-594
22	1.1	0.4	0.5	Fig.14	142-XX-422-00-591	142-XX-422-00-592	142-XX-422-00-593	142-XX-422-00-594
24	1.2	0.6	0.7	Fig.18	142-XX-624-00-591	142-XX-624-00-592	142-XX-624-00-593	142-XX-624-00-594
28	1.4	0.6	0.7	Fig.19	142-XX-628-00-591	142-XX-628-00-592	142-XX-628-00-593	142-XX-628-00-594
32	1.6	0.6	0.7	Fig.20	142-XX-632-00-591	142-XX-632-00-592	142-XX-632-00-593	142-XX-632-00-594
40	2.0	0.6	0.7	Fig.22	142-XX-640-00-591	142-XX-640-00-592	142-XX-640-00-593	142-XX-640-00-594

Shorter strip lengths are available "cut to order". Please specify total number of pins required per strip.

SPECIFY PLATING CODE XX=	10	90
Pin Plating	10μ" Au	200μ" Sn

SIP SOCKETS, CARRIERS AND HEADERS QUICK SELECTOR CHART

USE THIS CONVENIENT CHART TO SELECT THE RIGHT SIP SOCKET FOR YOUR APPLICATION.

1) Determine the style of pin needed to meet your requirement.
2) Select the appropriate insulator frame.
3) Turn to indicated page for detail and ordering information.
4) For custom assembly in a selected insulator, contact our applications engineers.

SIP SOCKETS AND CARRIERS

SELECT PIN

SELECT INSULATOR

TURN TO PAGE #

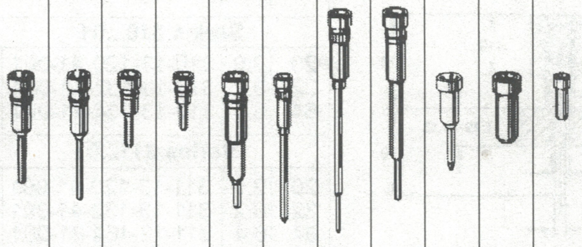

									Socket Carriers		
	Standard Solder Tail	Long Solder Tail	Very Low Profile	Ultra Low Profile	Solderless Press-Fit	1-4 Level Wrapost	Pluggable Wrapost	Elevated	Solder Tail	Low Profile	Miniature
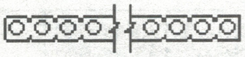 **SINGLE ROW (SIP) STRIP**	38	38	38	38	39	39	39	38	42	42	42
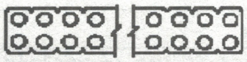 **DOUBLE ROW STRIP**	40	40	40	40	41	41	41	41	42	42	42

SIP HEADERS

SELECT PIN

SELECT INSULATOR

TURN TO PAGE #

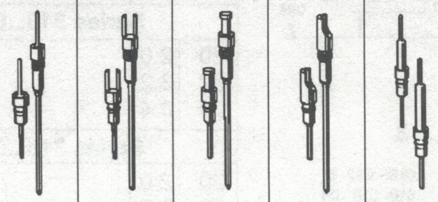

	.019 Dia. Pin Solder Tail & Wrapost	Slotted Head Solder Tail & Wrapost	Turret Head Solder Tail & Wrapost	Solder Cup Solder Tail & Wrapost	Elevated Pin to Pin
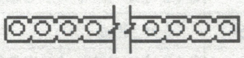 **SINGLE ROW (SIP) STRIP**	43	44	44	44	44
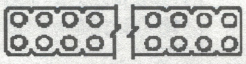 **DOUBLE ROW STRIP**	45	45	45	45	45

For Shrink DIP Sockets (on .070" grid), see page 61.

For Technical Specifications, see page 4.

Mill-Max offers "cut-to-order" strip lengths. Please specify total number of pins / sockets per strip.

SINGLE-IN-LINE SOCKETS
Solder Tail
Single Row

Series 310, 311 315, 316

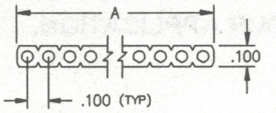

A
.100
.100 (TYP)

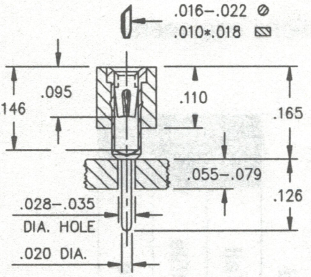

.016–.022 ⊘
.010*.018 ▨
.095
.146
.110
.165
.055–.079
.126
.028–.035
DIA. HOLE
.020 DIA.

310...01

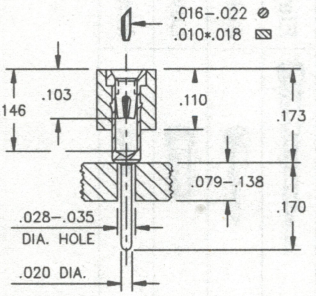

.016–.022 ⊘
.010*.018 ▨
.103
.146
.110
.173
.079–.138
.170
.028–.035
DIA. HOLE
.020 DIA.

311...01

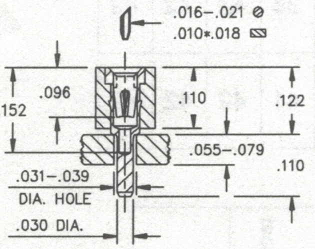

.016–.021 ⊘
.010*.018 ▨
.096
.152
.110
.122
.055–.079
.110
.031–.039
DIA. HOLE
.030 DIA.

315...01

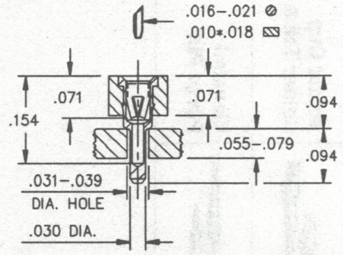

.016–.021 ⊘
.010*.018 ▨
.071
.154
.071
.094
.055–.079
.094
.031–.039
DIA. HOLE
.030 DIA.

315...03

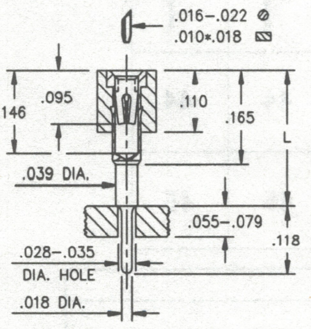

.016–.022 ⊘
.010*.018 ▨
.095
.146
.110
.165
L
.039 DIA.
.055–.079
.118
.028–.035
DIA. HOLE
.018 DIA.

316...0X

- Series 31X single row strip sockets may be cut to any length.
- Various solder tails available: standard length, long for multi-layer boards, very low and ultra low profile. See Mill-Max #1001, 0134, 0501 or 0703 pins.
- Interconnects available in 5 lengths, use Mill-Max# 0153 pins.
- Hi-Rel, 4-finger #30 clip. See page 157 for details.

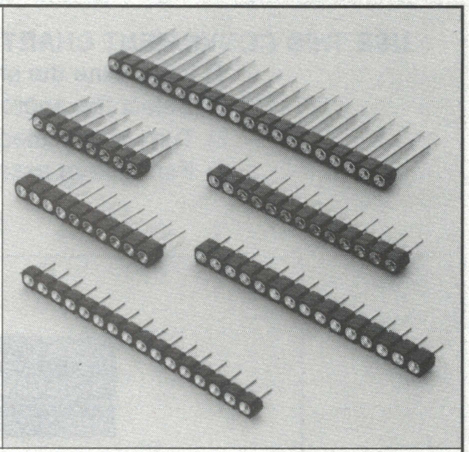

Ordering Information

No. of pins	A				
		Series 310...01	**Standard Solder Tail**		
20	2.0	310-13-120-41-001	310-91-120-41-001	310-93-120-41-001	310-99-120-41-001
32	3.2	310-13-132-41-001	310-91-132-41-001	310-93-132-41-001	310-99-132-41-001
64	6.4	310-13-164-41-001	310-91-164-41-001	310-93-164-41-001	310-99-164-41-001
		Series 311...01	**Long Solder Tail**		
20	2.0	311-13-120-41-001		311-93-120-41-001	311-99-120-41-001
32	3.2	311-13-132-41-001		311-93-132-41-001	311-99-132-41-001
64	6.4	311-13-164-41-001		311-93-164-41-001	311-99-164-41-001
		Series 315...01	**Very Low Profile**		
20	2.0	315-13-120-41-001		315-93-120-41-001	
32	3.2	315-13-132-41-001		315-93-132-41-001	
64	6.4	315-13-164-41-001		315-93-164-41-001	
		Series 315...03	**Ultra Low Profile**		
20	2.0	315-13-120-41-003	315-91-120-41-003	315-93-120-41-003	315-99-120-41-003
32	3.2	315-13-132-41-003	315-91-132-41-003	315-93-132-41-003	315-99-132-41-003
64	6.4	315-13-164-41-003	315-91-164-41-003	315-93-164-41-003	315-99-164-41-003
		Series 316...06	**Interconnect**	**L=.236**	
20	2.0			316-93-120-41-006	
32	3.2			316-93-132-41-006	
64	6.4			316-93-164-41-006	
		Series 316...03	**Interconnect**	**L=.315**	
20	2.0			316-93-120-41-003	
32	3.2			316-93-132-41-003	
64	6.4			316-93-164-41-003	
		Series 316...07	**Interconnect**	**L=.402**	
20	2.0			316-93-120-41-007	
32	3.2			316-93-132-41-007	
64	6.4			316-93-164-41-007	
		Series 316...08	**Interconnect**	**L=.472**	
20	2.0			316-93-120-41-008	
32	3.2			316-93-132-41-008	
64	6.4			316-93-164-41-008	
		Series 316...01	**Interconnect**	**L=.594**	
20	2.0			316-93-120-41-001	
32	3.2			316-93-132-41-001	
64	6.4			316-93-164-41-001	

Shorter strip lengths are available "cut to order". Please specify total number of pins required per strip.

SPECIFY PLATING CODE XX=		13	91	93		99
Sleeve (Pin)	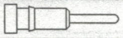	10μ" Au	200μ" Sn	200μ" Sn		200μ" Sn
Contact (Clip)		30μ" Au	10μ" Au	30μ" Au		200μ" Sn

SINGLE-IN-LINE SOCKETS
Solderless Press-Fit and Wrapost
Single Row

Series 304, 321, 322, 323 324, 326, 346

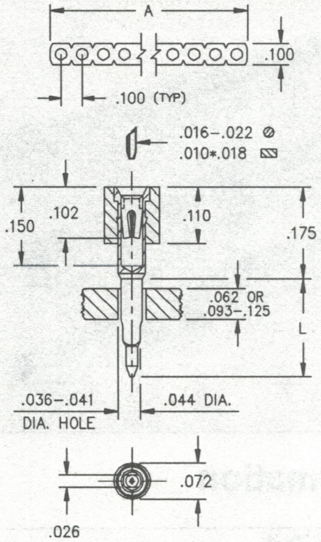
A
.100
.100 (TYP)
.016–.022 ⊘
.010*.018 ▨
.102
.150
.110
.175
.062 OR
.093–.125
L
.036–.041
DIA. HOLE
.044 DIA.
.072
.026

304...770/780

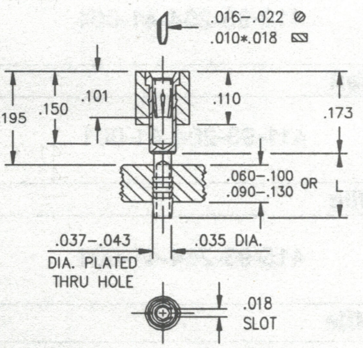
.016–.022 ⊘
.010*.018 ▨
.101
.195
.150
.110
.173
.060–.100
.090–.130
OR
L
.037–.043
DIA. PLATED
THRU HOLE
.035 DIA.
.018
SLOT

346...012/013

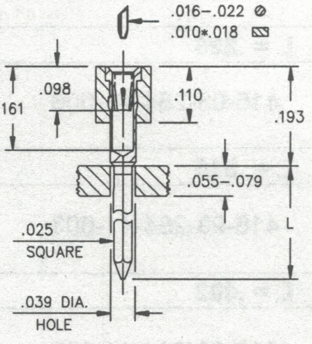
.016–.022 ⊘
.010*.018 ▨
.098
.161
.110
.193
.055–.079
.025
SQUARE
L
.039 DIA.
HOLE

32X...0X

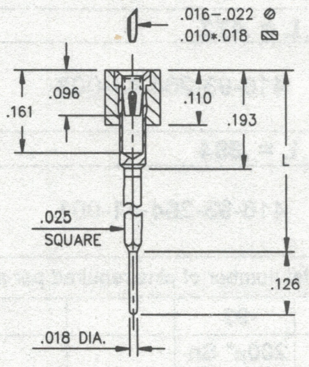
.016–.022 ⊘
.010*.018 ▨
.096
.161
.110
.193
L
.025
SQUARE
.126
.018 DIA.

326...01/02/03

- Series 3XX single row strip sockets may be cut to any length.
- Available for solderless press-fit: M-M# 0477, 0478, 4612, 4613 or with one to four level wraposts: 0040, 0089, 0088 or 0086 pins.
- Recommended mounting hole for 304 series is given on page 16. For 346 series, see page 17.
- Also available with wrapost / solder tail combinations: 2601, 2602, or 2603 pins.

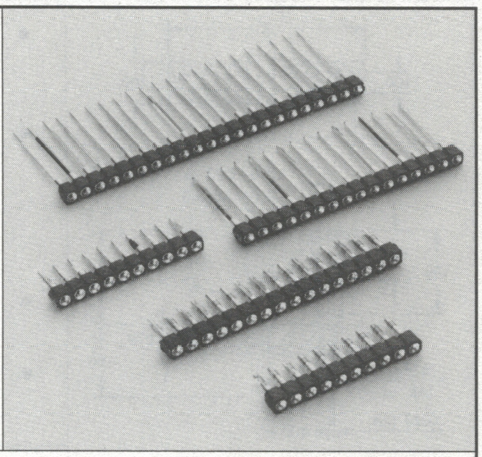

Ordering Information

SOLDERLESS PRESS-FIT

No. of pins	A	Series 304...770 L = .175 (For .062" Thick Board)	Series 304...780 L = .250 (For .125" Thick Board)
20	2.0	304-13-120-41-770	304-13-120-41-780
32	3.2	304-13-132-41-770	304-13-132-41-780
64	6.4	304-13-164-41-770	304-13-164-41-780

Series 304...770 and 304...780 are available in plating code 13 only.

COMPLIANT SOLDERLESS PRESS-FIT

		Series 346...012 L = .120 (For .060-.100" Board)	Series 346...013 L = .176 (For .090-.130" Board)
20	2.0	346-XX-120-41-012	346-XX-120-41-013
32	3.2	346-XX-132-41-012	346-XX-132-41-013
64	6.4	346-XX-164-41-012	346-XX-164-41-013

SPECIFY PLATING CODE XX=	93	99
Sleeve (Pin)	200μ" Sn	200μ" Sn
Contact (Clip)	30μ" Au	200μ" Sn

WRAPOST & WRAPOST WITH SOLDER TAIL

		1 Level Wrapost L = .260	2 Level Wrapost L = .375
20	2.0	321-XX-120-41-001	322-XX-120-41-001
32	3.2	321-XX-132-41-001	322-XX-132-41-001
64	6.4	321-XX-164-41-001	322-XX-164-41-001

		3 Level Wrapost L = .515	4 Level Wrapost L = .630
20	2.0	323-XX-120-41-001	324-XX-120-41-002
32	3.2	323-XX-132-41-001	324-XX-132-41-002
64	6.4	323-XX-164-41-001	324-XX-164-41-002

		1 Level Wrapost & Solder Tail L = .425	2 Level Wrapost & Solder Tail L = .543	3 Level Wrapost & Solder Tail L = .661
20	2.0	326-XX-120-41-001	326-XX-120-41-002	326-XX-120-41-003
32	3.2	326-XX-132-41-001	326-XX-132-41-002	326-XX-132-41-003
64	6.4	326-XX-164-41-001	326-XX-164-41-002	326-XX-164-41-003

SPECIFY PLATING CODE XX=	13	93
Sleeve (Pin)	10μ" Au	200μ" Sn
Contact (Clip)	30μ" Au	30μ" Au

SINGLE-IN-LINE SOCKETS
Solder Tail
Double Row

Series 410, 411
415, 416

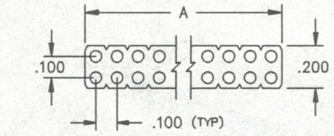
A
.100
.200
.100 (TYP)

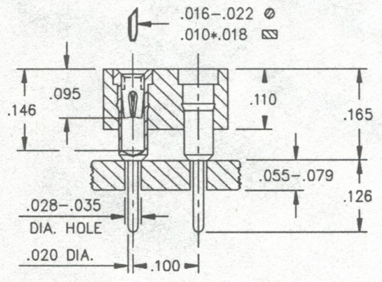
.016–.022 ⌀
.010*.018 ▧
.095
.146
.110
.165
.055–.079
.126
.028–.035
DIA. HOLE
.020 DIA.
.100

410...01

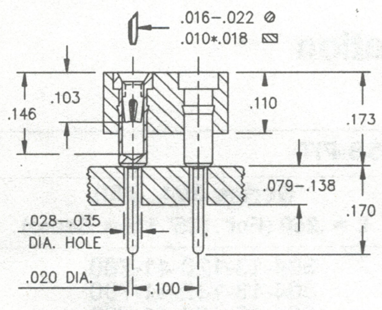
.016–.022 ⌀
.010*.018 ▧
.103
.146
.110
.173
.079–.138
.170
.028–.035
DIA. HOLE
.020 DIA.
.100

411...01

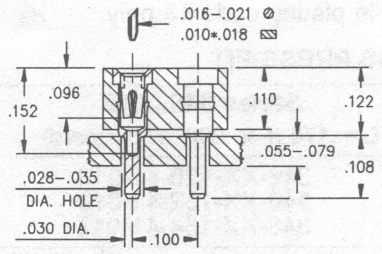
.016–.021 ⌀
.010*.018 ▧
.096
.152
.110
.122
.055–.079
.108
.028–.035
DIA. HOLE
.030 DIA.
.100

415...01

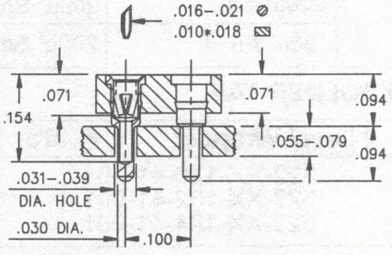
.016–.021 ⌀
.010*.018 ▧
.071
.154
.071
.094
.055–.079
.094
.031–.039
DIA. HOLE
.030 DIA.
.100

415...03

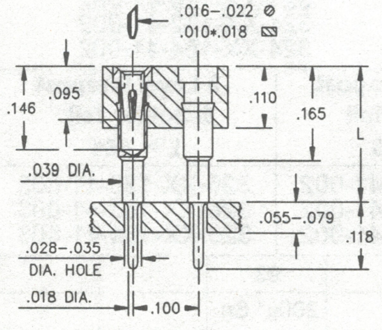
.016–.022 ⌀
.010*.018 ▧
.095
.146
.110
.165
L
.039 DIA.
.055–.079
.118
.028–.035
DIA. HOLE
.018 DIA.
.100

416...0X

- Series 41X double row strip sockets are available in all lengths up to 2 X 32.
- Various solder pins available (standard, long for multi-layer boards, very low and ultra low). See Mill-Max #1001, 0134, 0501 or 0703 pins.
- Interconnects available in 5 lengths, use Mill-Max #0153 pins.
- Hi-Rel, 4-finger #30 clip. See page 157 for details.

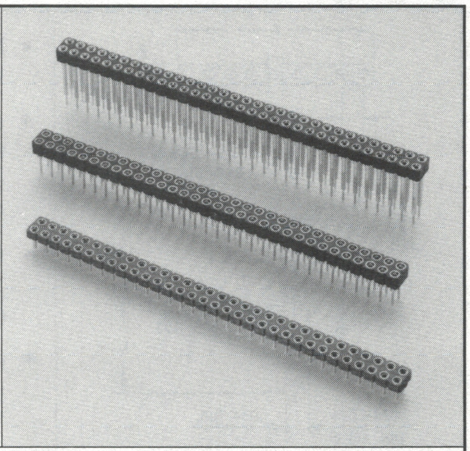

No. of pins	A	Ordering Information	
		Series 410...01	**Standard Solder Tail**
2x32	3.2	410-13-264-41-001	410-93-264-41-001
		Series 411...01	**Long Solder Tail**
2x32	3.2	411-13-264-41-001	411-93-264-41-001
		Series 415...01	**Very Low Profile**
2x32	3.2	415-13-264-41-001	415-93-264-41-001
		Series 415...03	**Ultra Low Profile**
2x32	3.2	415-13-272-41-003	415-93-272-41-003
		Series 416...06	**Interconnect L = .236**
2x32	3.2		416-93-264-41-006
		Series 416...03	**Interconnect L = .315**
2x32	3.2		416-93-264-41-003
		Series 416...07	**Interconnect L = .402**
2x32	3.2		416-93-264-41-007
		Series 416...08	**Interconnect L = .472**
2x32	3.2		416-93-264-41-008
		Series 416...01	**Interconnect L = .594**
2x32	3.2		416-93-264-41-001

Shorter strip lengths are available "cut to order". Please specify total number of pins required per strip.

SPECIFY PLATING CODE XX=	13	93
Sleeve (Pin)	10μ" Au	200μ" Sn
Contact (Clip)	30μ" Au	30μ" Au

SINGLE-IN-LINE SOCKETS
Solderless Press-Fit and Wrapost Double Row

Series 421, 422, 423, 424, 426, 446

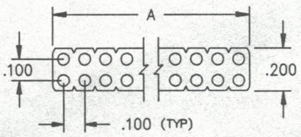

A
.100
.200
.100 (TYP)

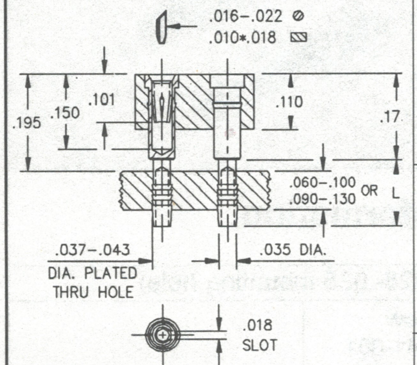

.016-.022 ⌀
.010*.018 ▧
.195
.150
.101
.110
.17
.060-.100
.090-.130
OR L
.037-.043
DIA. PLATED
THRU HOLE
.035 DIA.
.018
SLOT

446...012/013

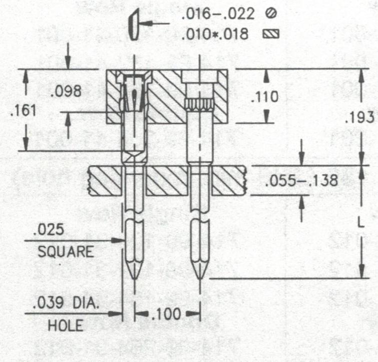

.016-.022 ⌀
.010*.018 ▧
.098
.161
.110
.193
.055-.138
L
.025
SQUARE
.039 DIA.
HOLE
.100

42X...0X

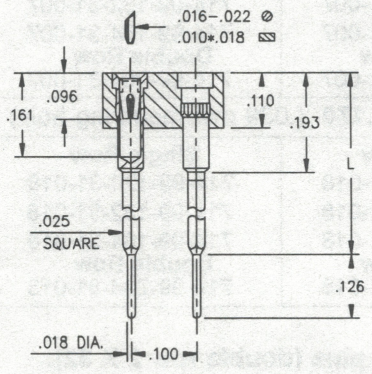

.016-.022 ⌀
.010*.018 ▧
.096
.161
.110
.193
L
.025
SQUARE
.126
.018 DIA.
.100

426...01/02/03

- Series 4XX double row strip sockets with one to four-level wraposts: M-M# 0040, 0089, 0088, or 0086 pins.
- Available for compliant solderless press-fit: M-M# 4612 or 4613 pins. See page 17 for mounting hole.
- Also available with wrapost/ solder tail combination for interconnect purposes: M-M# 2601, 2602 or 2603 pins.
- Hi-Rel, 4-finger #30 clip. See page 157 for details.

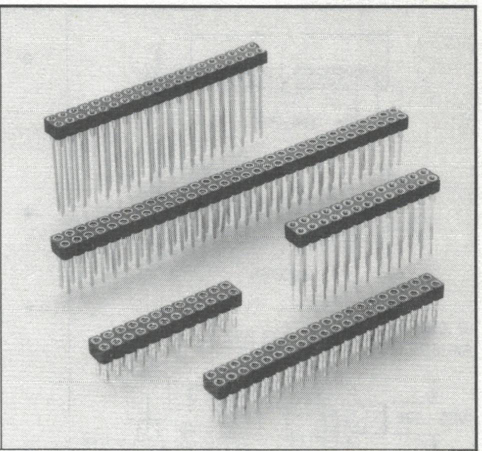

Ordering Information

COMPLIANT SOLDERLESS PRESS-FIT

No. of pins	A	Series 446...012 L = .120 (For .060-.100" Board)	Series 446...013 L = .176 (For .090-.130" Board)
2x32	3.2	446-XX-264-41-012	446-XX-264-41-013

SPECIFY PLATING CODE XX=	93	99
Sleeve (Pin)	200µ"Sn	200µ"Sn
Contact (Clip)	30µ"Au	200µ"Sn

WRAPOST & WRAPOST WITH SOLDER TAIL

Series 421...01	**1 Level Wrapost**	**L = .260**
2x32	3.2	421-XX-264-41-001
Series 422...01	**2 Level Wrapost**	**L = .375**
2x32	3.2	422-XX-264-41-001
Series 423...01	**3 Level Wrapost**	**L = .515**
2x32	3.2	423-XX-264-41-001
Series 424...02	**4 Level Wrapost**	**L = .630**
2x32	3.2	424-XX-264-41-002
Series 426...01	**1 Level Wrapost + Solder Tail**	**L = .425**
2x32	3.2	426-XX-264-41-001
Series 426...02	**2 Level Wrapost + Solder Tail**	**L = .543**
2x32	3.2	426-XX-264-41-002
Series 426...03	**3 Level Wrapost + Solder Tail**	**L = .661**
2x32	3.2	426-XX-264-41-003

SPECIFY PLATING CODE XX=	13	93
Sleeve (Pin)	10µ" Au	200µ" Sn
Contact (Clip)	30µ" Au	30µ" Au

MILL-MAX®

SINGLE-IN-LINE SOCKETS
Carrier Type
Single and Double Row

Series 712, 714

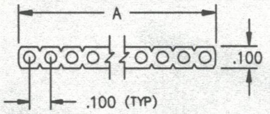
A
.100
.100 (TYP)

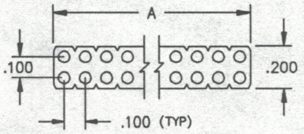
A
.100
.200
.100 (TYP)

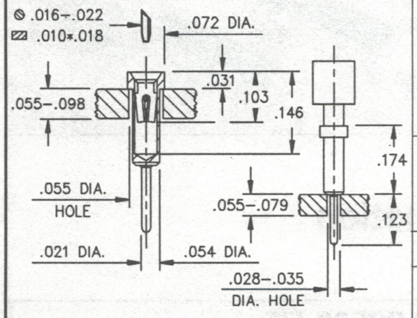
⊘ .016–.022
▨ .010∗.018
.072 DIA.
.031
.103
.146
.055–.098
.174
.055 DIA.
HOLE
.055–.079
.123
.021 DIA.
.054 DIA.
.028–.035
DIA. HOLE

712...01

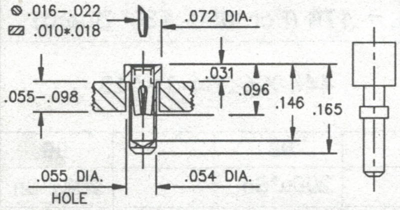
⊘ .016–.022
▨ .010∗.018
.072 DIA.
.031
.096
.146
.165
.055–.098
.055 DIA.
HOLE
.054 DIA.

714...01

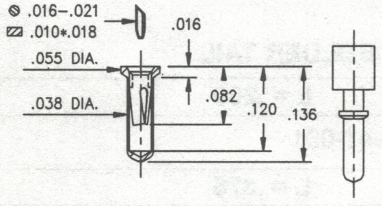
⊘ .016–.021
▨ .010∗.018
.016
.055 DIA.
.038 DIA.
.082
.120
.136

714...12

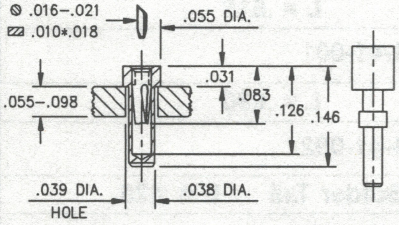
⊘ .016–.021
▨ .010∗.018
.055 DIA.
.031
.083
.126
.146
.055–.098
.039 DIA.
HOLE
.038 DIA.

714...07

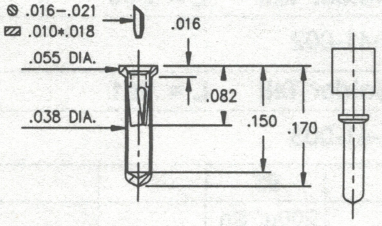
⊘ .016–.021
▨ .010∗.018
.016
.055 DIA.
.038 DIA.
.082
.150
.170

714...18

- Available with standard solder tail or low profile receptacles and ultra thin contacts for PCB mounting. See page 27 for application details.
- Series 712 uses M-M# 0255 pin. See page 91 for details.
- Series 714 uses M-M# 1401, 0552-1, 1407 or 0552-2 pin receptacles. See pages 83 & 89 for details.

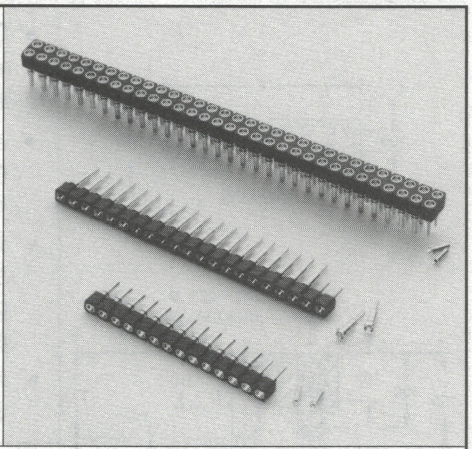

No. of pins	A	Ordering Information		
		Series 712...01 Solder Tail (.028-.035 mounting hole)		
		Single Row	**Single Row**	
20	2.0	712-13-120-41-001	712-93-120-41-001	
32	3.2	712-13-132-41-001	712-93-132-41-001	
64	6.4	712-13-164-41-001	712-93-164-41-001	
		Double Row	**Double Row**	
2x32	3.2	712-13-264-41-001	712-93-264-41-001	
		Series 714...01 Low Profile L = .165 (.055 min. mounting hole)		
			Single Row	**Single Row**
20	2.0		714-93-120-41-001	714-99-120-41-001
32	3.2		714-93-132-41-001	714-99-132-41-001
64	6.4		714-93-164-41-001	714-99-164-41-001
			Double Row	**Double Row**
2x32	3.2		714-93-264-41-001	714-99-264-41-001
		Series 714...12 Low Profile L = .136 (.039 min. mounting hole)		
			Single Row	**Single Row**
20	2.0		714-93-120-31-012	714-99-120-31-012
32	3.2		714-93-132-31-012	714-99-132-31-012
64	6.4		714-93-164-31-012	714-99-164-31-012
			Double Row	**Double Row**
2x32	3.2		714-93-264-31-012	714-99-264-31-012
		Series 714...07 Low Profile L = .146 (.039 min. mounting hole)		
			Single Row	**Single Row**
20	2.0		714-93-120-31-007	714-99-120-31-007
32	3.2		714-93-132-31-007	714-99-132-31-007
64	6.4		714-93-164-31-007	714-99-164-31-007
			Double Row	**Double Row**
2x32	3.2		714-93-264-31-007	714-99-264-31-007
		Series 714...18 Low Profile L = .170 (.039 min mounting hole)		
			Single Row	**Single Row**
20	2.0		714-93-120-31-018	714-99-120-31-018
32	3.2		714-93-132-31-018	714-99-132-31-018
64	6.4		714-93-164-31-018	714-99-164-31-018
			Double Row	**Double Row**
2x32	3.2		714-93-264-31-018	714-99-264-31-018

If desired we will supply any length up to 64 pins (double row 2 X 32).

SPECIFY PLATING CODE XX=	13	93	99
Sleeve (Pin)	10µ" Au	200µ" Sn	200µ" Sn
Contact (Clip)	30µ" Au	30µ" Au	200µ" Sn

HEADER STRIPS
Interconnect
Single Row

Series 334, 342, 351

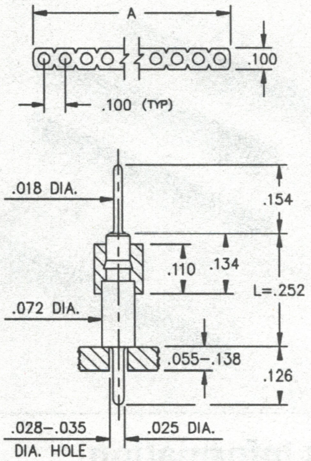

A
.100
.100 (TYP)
.018 DIA.
.154
.110
.134
L=.252
.072 DIA.
.055–.138
.126
.028–.035
DIA. HOLE
.025 DIA.

351...03

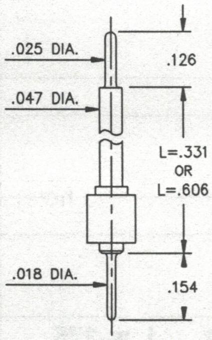

.025 DIA.
.126
.047 DIA.
L=.331
OR
L=.606
.018 DIA.
.154

351...04/05

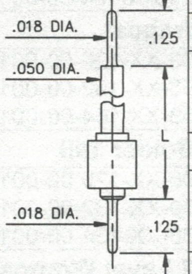

.018 DIA.
.125
.050 DIA.
L
.018 DIA.
.125

342...59X

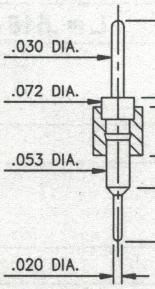

.030 DIA.
.169
.072 DIA.
.110
.170
L=.190
.053 DIA.
.120
.020 DIA.

334...020

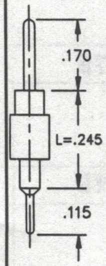

.170
L=.245
.115

334...
...010

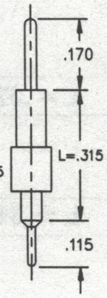

.170
L=.315
.115

334...
...050

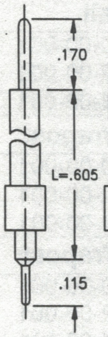

.170
L=.605
.115

334...
...000

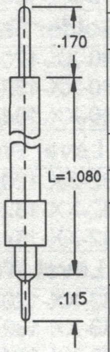

.170
L=1.080
.115

334...
...100

- Series 351 Interconnect Header Strips come in three lengths with .018" dia. pluggable solder tails at one end and .025" dia. pins at the other. (M-M# 5503, 5504 or 5505).
- .018" pluggable solder tails are available at both ends, please specify as follows:
  for L =.252", 351...009
  for L =.331", 351...010
  for L =.606", 351...011
- Series 334 Interconnect strips come in five lengths. (M-M#3400, 3401, 3402, 3405 or 3410).

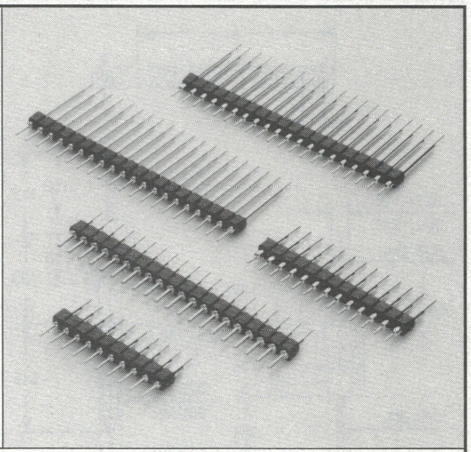

No. of pins	A	Ordering Information			
		.018 / .025 Pin Interconnect L=.252		.018 / .018 Pin Interconnect L=.252	
20	2.0	351-XX-120-00-003		351-XX-120-00-009	
32	3.2	351-XX-132-00-003		351-XX-132-00-009	
64	6.4	351-XX-164-00-003		351-XX-164-00-009	
		.018 / .025 Pin Interconnect L=.331		.018 / .018 Pin Interconnect L=.331	
20	2.0	351-XX-120-00-004		351-XX-120-00-010	
32	3.2	351-XX-132-00-004		351-XX-132-00-010	
64	6.4	351-XX-164-00-004		351-XX-164-00-010	
		.018 / .025 Pin Interconnect L=.606		.018 / .018 Pin Interconnect L=.606	
20	2.0	351-XX-120-00-005		351-XX-120-00-011	
32	3.2	351-XX-132-00-005		351-XX-132-00-011	
64	6.4	351-XX-164-00-005		351-XX-164-00-011	
		.020 / .030 Pin Interconnect L=.190			
20	2.0	334-XX-120-00-020			
32	3.2	334-XX-132-00-020			
64	6.4	334-XX-164-00-020			
		.020 / .030 Pin Interconnect L=.245			
20	2.0	334-XX-120-00-010			
32	3.2	334-XX-132-00-010			
64	6.4	334-XX-164-00-010			
		.020 / .030 Pin Interconnect L=.315			
20	2.0	334-XX-120-00-050			
32	3.2	334-XX-132-00-050			
64	6.4	334-XX-164-00-050			
		.020 / .030 Pin Interconnect L=.605			
20	2.0	334-XX-120-00-000			
32	3.2	334-XX-132-00-000			
64	6.4	334-XX-164-00-000			
		.020 / .030 Pin Interconnect L=1.080			
20	2.0	334-XX-120-00-100			
32	3.2	334-XX-132-00-100			
64	6.4	334-XX-164-00-100			
		.018 / .018 Pin Interconnect			
		L = .210	L = .335	L = .585	L = .835
20	2.0	342-XX-120-00-591	342-XX-120-00-592	342-XX-120-00-593	342-XX-120-00-594
32	3.2	342-XX-132-00-591	342-XX-132-00-592	342-XX-132-00-593	342-XX-132-00-594
64	6.4	342-XX-164-00-591	342-XX-164-00-592	342-XX-164-00-593	342-XX-164-00-594

Shorter strip lengths are available "cut to order".
Please specify total number of pins required per strip.

SPECIFY PLATING CODE XX=	10	90		
Pin Plating 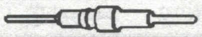	10µ" Au	200µ" Sn		

MILL-MAX®

HEADER STRIPS
Solder Tail and Wrapost
Single Row

Series 350/3, 360/2/3
370/3, 380/2/3

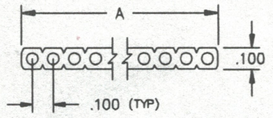

A
.100
.100 (TYP)

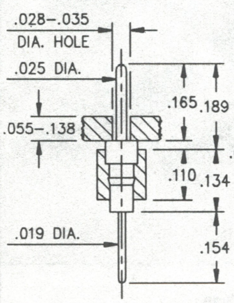

.028–.035
DIA. HOLE
.025 DIA.
.165
.189
.055–.138
.110
.134
.019 DIA.
.154

350

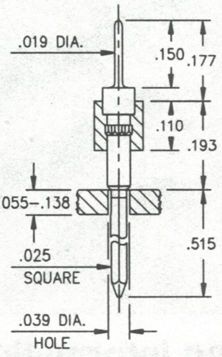

.019 DIA.
.150
.177
.110
.193
.055–.138
.515
.025
SQUARE
.039 DIA.
HOLE

353

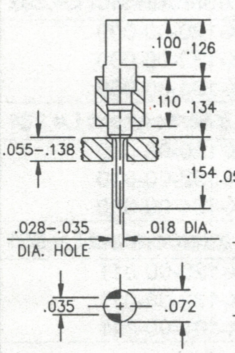

.100
.126
.110
.134
.055–.138
.154
.028–.035
DIA. HOLE
.018 DIA.
.035
.072

360

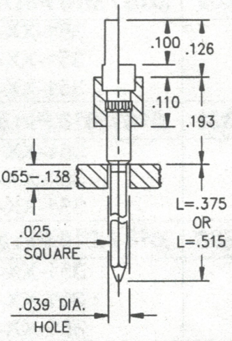

.100
.126
.110
.193
.055–.138
L=.375
OR
L=.515
.025
SQUARE
.039 DIA.
HOLE

362/363

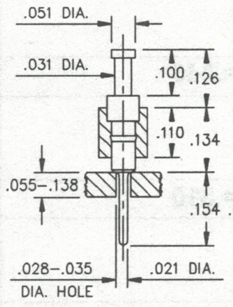

.051 DIA.
.031 DIA.
.100
.126
.110
.134
.055–.138
.154
.028–.035
DIA. HOLE
.021 DIA.

370

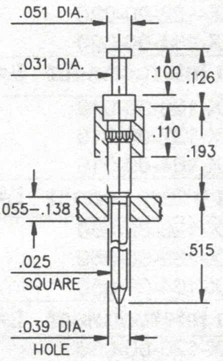

.051 DIA.
.031 DIA.
.100
.126
.110
.193
.055–.138
.515
.025
SQUARE
.039 DIA.
HOLE

373

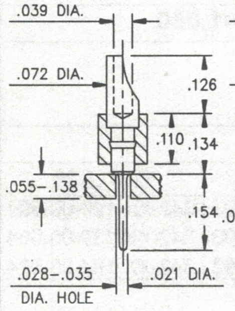

.039 DIA.
.072 DIA.
.126
.110
.134
.055–.138
.154
.028–.035
DIA. HOLE
.021 DIA.

380

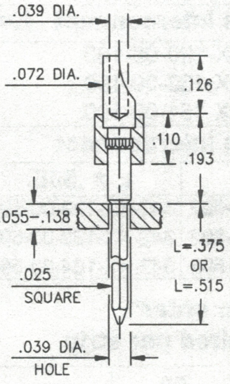

.039 DIA.
.072 DIA.
.126
.110
.193
.055–.138
L=.375
OR
L=.515
.025
SQUARE
.039 DIA.
HOLE

382/383

- Series 35X, 36X, 37X, 38X single row Header Strips come with various contacts (pin, slotted head, turret and solder cup) with either pluggable solder tails (M-M# 0290, 0282, 0700, or 8000) or wrapost terminals (M-M# 5301, 1106, 0730 or 8301).
- Shorter strip lengths are available "cut to order". Please specify total number of pins required per strip.

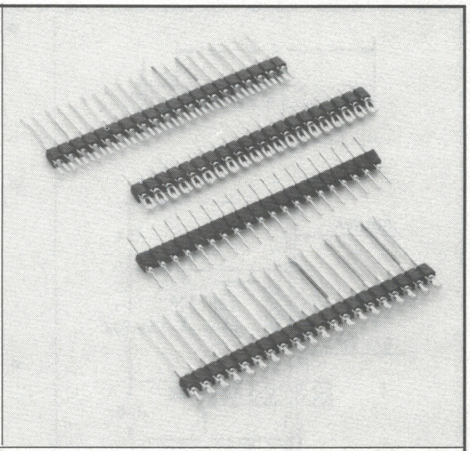

No. of pins	A	Ordering Information
		Series 350 Pin / Solder Tail
20	2.0	350-XX-120-00-001
32	3.2	350-XX-132-00-001
64	6.4	350-XX-164-00-001
		Series 353 Pin / 3 Level Wrapost
20	2.0	353-XX-120-00-001
32	3.2	353-XX-132-00-001
64	6.4	353-XX-164-00-001
		Series 360 Slotted Head / Solder Tail
20	2.0	360-XX-120-00-001
32	3.2	360-XX-132-00-001
64	6.4	360-XX-164-00-001
		Series 362 Slotted Head / 2 Level Wrapost L = .375
20	2.0	362-XX-120-00-001
32	3.2	362-XX-132-00-001
64	6.4	362-XX-164-00-001
		Series 363 Slotted Head / 3 Level Wrapost L = .515
20	2.0	363-XX-120-00-001
32	3.2	363-XX-132-00-001
64	6.4	363-XX-164-00-001
		Series 370 Turret / Solder Tail
20	2.0	370-XX-120-00-001
32	3.2	370-XX-132-00-001
64	6.4	370-XX-164-00-001
		Series 373 Turret / 3 Level Wrapost
20	2.0	373-XX-120-00-001
32	3.2	373-XX-132-00-001
64	6.4	373-XX-164-00-001
		Series 380 Solder Cup / Solder Tail
20	2.0	380-XX-120-00-001
32	3.2	380-XX-132-00-001
64	6.4	380-XX-164-00-001
		Series 382 Solder Cup / 2 Level Wrapost L = .375
20	2.0	382-XX-120-00-001
32	3.2	382-XX-132-00-001
64	6.4	382-XX-164-00-001
		Series 383 Solder Cup / 3 Level Wrapost L = .515
20	2.0	383-XX-120-00-001
32	3.2	383-XX-132-00-001
64	6.4	383-XX-164-00-001

SPECIFY PLATING CODE XX=	10	90
Pin Plating 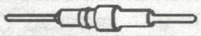	10µ" Au	200µ" Sn

HEADER STRIPS
Solder Tail and Wrapost
Double Row

Series 442, 450/3, 451 460/3, 470/3, 480/3

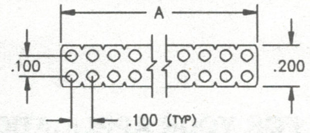
A
.100
.200
.100 (TYP)

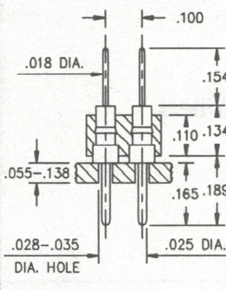
.100
.018 DIA.
.154
.110
.134
.055-.138
.165
.189
.028-.035
DIA. HOLE
.025 DIA.

450

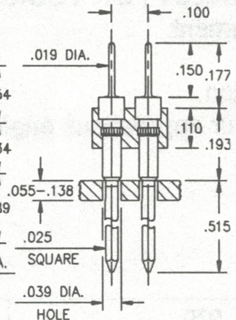
.100
.019 DIA.
.150
.177
.110
.193
.055-.138
.025
SQUARE
.515
.039 DIA.
HOLE

453

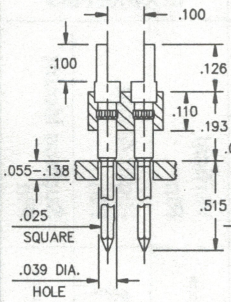
.100
.100
.126
.110
.193
.055-.138
.025
SQUARE
.515
.039 DIA.
HOLE

463

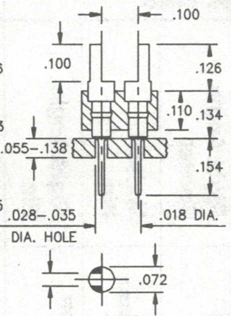
.100
.100
.126
.110
.134
.055-.138
.154
.028-.035
DIA. HOLE
.018 DIA.
.072
.035

460

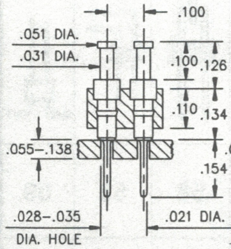
.100
.051 DIA.
.031 DIA.
.100
.126
.110
.134
.055-.138
.154
.028-.035
DIA. HOLE
.021 DIA.

470

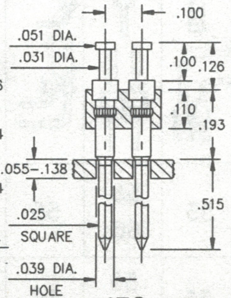
.051 DIA.
.031 DIA.
.100
.100
.126
.110
.193
.055-.138
.025
SQUARE
.515
.039 DIA.
HOLE

473

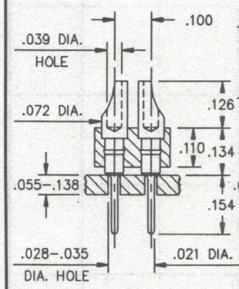
.100
.039 DIA.
HOLE
.072 DIA.
.126
.110
.134
.055-.138
.154
.028-.035
DIA. HOLE
.021 DIA.

480

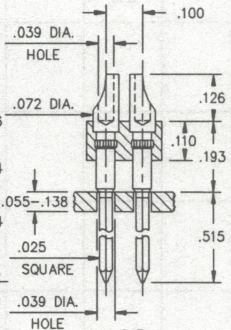
.039 DIA.
HOLE
.100
.072 DIA.
.126
.110
.193
.055-.138
.025
SQUARE
.515
.039 DIA.
HOLE

483

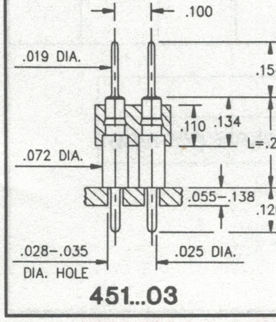
.100
.019 DIA.
.154
.110
.134
L=.252
.072 DIA.
.055-.138
.126
.028-.035
DIA. HOLE
.025 DIA.

451...03

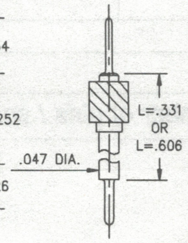
L=.331
OR
L=.606
.047 DIA.

451...04/05

- Various contacts available (pin, slotted head, turret, solder cup) with either soldering (M-M#0290, 0282, 0700 or 8000) or wrapping (M-M#5301, 1106, 0730 or 8301) terminations.
- Interconnects available in 3 lengths (M-M#5503, 5504 & 5505).
- Pin dia .019" at both ends available on request:
  for L=.252", 451...009
  for L=.331", 451...010
  for L=.606", 451...011

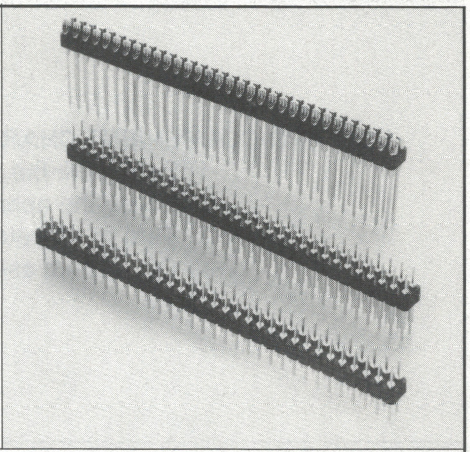

No. of pins	A		Ordering Information
		Series 450	**Pin / Solder Tail**
2x32	3.2		450-XX-264-00-001
		Series 453	**Pin / 3 Level Wrapost**
2x32	3.2		453-XX-264-00-001
		Series 460	**Slotted Head / Solder Tail**
2x32	3.2		460-XX-264-00-001
		Series 463	**Slotted Head / 3 Level Wrapost**
2x32	3.2		463-XX-264-00-001
		Series 470	**Turret / Solder Tail**
2x32	3.2		470-XX-264-00-001
		Series 473	**Turret / 3 Level Wrapost**
2x32	3.2		473-XX-264-00-001
		Series 480	**Solder Cup / Solder Tail**
2x32	3.2		480-XX-264-00-001
		Series 483	**Solder Cup / 3 Level Wrapost**
2x32	3.2		483-XX-264-00-001
		Series 451...03	**Interconnect L=.252**
2x32	3.2		451-XX-264-00-003
		Series 451...04	**Interconnect L=.331**
2x32	3.2		451-XX-264-00-004
		Series 451...05	**Interconnect L=.606**
2x32	3.2		451-XX-264-00-005
		Series 442	**Interconnect**

		L=.210	**L=.335**	**L=.585**	**L=.835**
2x32	3.2	442-XX-264-00-591	442-XX-264-00-592	442-XX-264-00-593	442-XX-264-00-594

Shorter strip lengths are available "cut-to-order". Please specify total number of pins / sockets required per strip.

SPECIFY PLATING CODE XX=		10	90
Pin Plating	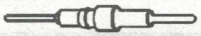	10µ" Au	200µ" Sn

INTERCONNECTS
QUICK SELECTOR CHART

USE THIS CONVENIENT CHART TO SELECT THE RIGHT INTERCONNECT FOR YOUR APPLICATION.

1) Determine the style of pin needed to meet your requirement.
2) Select the appropriate insulator frame.
3) Turn to indicated page for detail and ordering information.
4) For custom assembly in a selected insulator, contact our applications engineers.

	.018 DIA. PINS						.030 DIA. PINS					.025 SQUARE PINS		
SELECT PIN	Vertical Socket	Right Angle Socket	Vertical Pin	Right Angle Pin	Surface Mount Pin	Surface Mount Socket	Solderless Press-Fit	Vertical Socket	Right Angle Socket	Vertical Pin	Right Angle Pin	Vertical Pin	Right Angle Pin	Surface Mount Pin
SELECT INSULATOR TURN TO PAGE #	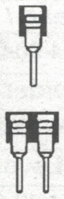	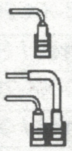	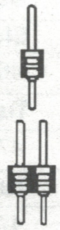	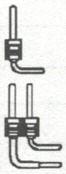	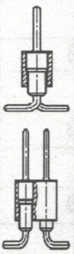	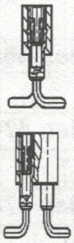	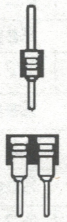	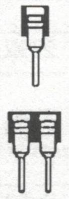	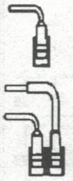	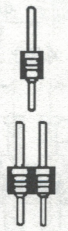	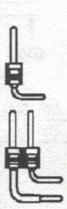	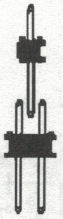	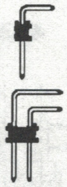	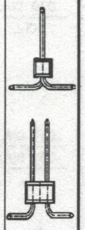
.100 GRID SINGLE ROW (SIP) STRIP	52	52	52 53	52	54	54	57	55 56	55	55 56	55	58	58	59
.100 GRID DOUBLE ROW STRIP	52	52	52 53	52	54	54	57	55 56	55	55 56	55	58	58	59
.050 GRID SINGLE ROW (SIP) STRIP	47	48	47	48	49	49								
.050 GRID DOUBLE ROW STRIP	47	48	47	48	49	49								
2 mm GRID SINGLE ROW (SIP) STRIP	50		50		51	51								
2 mm GRID DOUBLE ROW STRIP	50		50		51	51								

For Technical Specifications, see page 4.

Mill-Max offers "cut-to-order" SIP strip lengths. Please specify total number of pins / sockets per strip.

INTERCONNECTS
.050" Grid
Single and Double Row

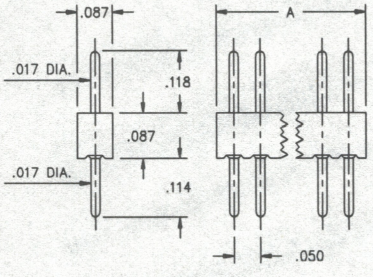
.087
A
.017 DIA.
.118
.087
.017 DIA.
.114
.050

Fig. 1

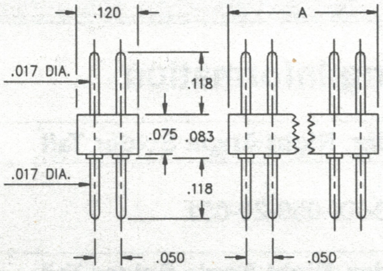
.120
A
.017 DIA.
.118
.075
.083
.017 DIA.
.118
.050
.050

Fig. 2

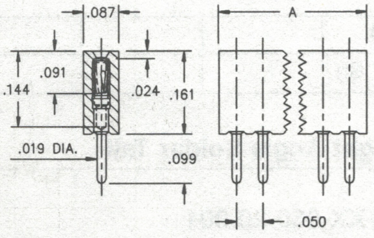
.087
A
.091
.144
.024
.161
.019 DIA.
.099
.050

Fig. 3

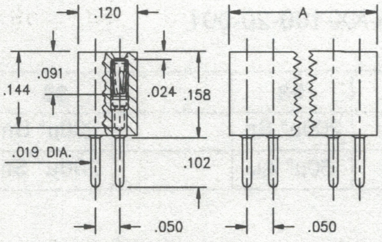
.120
A
.091
.144
.024
.158
.019 DIA.
.102
.050
.050

Fig. 4

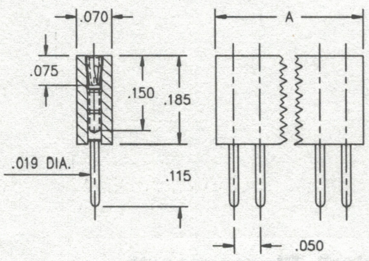
.070
A
.075
.150
.185
.019 DIA.
.115
.050

Fig. 5

- Series 850 single and double row interconnects have .050" pin spacing and permit board stacking as low as .248".
- Pin headers have .017" dia. pins. (M-M# 3006).
- MM# 0489 and 0467 Receptacles use Hi-Rel, 3-finger beryllium copper contacts.
- Insulators are high temp. PPS or LCP, suitable for all soldering operations.

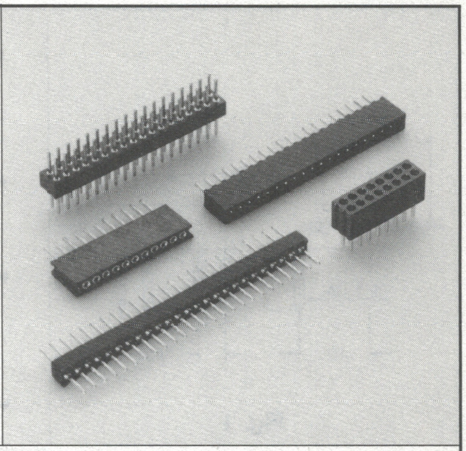

Fig.	No. of pins	A	Ordering Information
			Single Row, .087" Profile Pin Header
1	50	2.5	850-XX-050-10-001
			Double Row, .075" Profile Pin Header
2	2x50	2.5	852-XX-100-10-001

SPECIFY PLATING CODE XX=	10	90		
Pin Plating 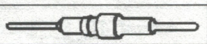	10µ" Au	200µ" Sn		

Fig.	No. of pins	A	Ordering Information
			Single Row, .161" Profile Socket
3	50	2.5	851-XX-050-10-001
			Double Row, .161" Profile Socket
4	2x50	2.5	853-XX-100-10-001
			Single Row, .185" Profile Socket
5	77	3.8	851-XX-077-10-002

SPECIFY PLATING CODE XX=			93		99
Sleeve (Pin) 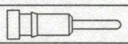			200µ" Sn		200µ" Sn
Contact (Clip) 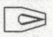			30µ" Au		200µ" Sn

Technical Specifications:

Insulator Material: Glass filled PPS or LCP, self extinguishing rated UL94V-O, color black.
Insertion / Extraction force: 60 / 30 grams typical per pin.
Mechanical Life: 500 cycles min.
Rated current: 1A
Contact Resistance: 10mΩ max.
Dielectric Strength: 1000 VRMS min.
Capacitance: 1pF max.
Rated voltage: 100 VRMS / 150 VDC
Insulation Resistance: 10,000 MΩ min.
Air and creepage distance: .009" min.

Shorter strip lengths are available "cut-to-order". Please specify total number of pins / sockets required per strip. Note that these interconnections are not buttable on .050" grid.

INTERCONNECTS
.050" Grid
Right Angle Headers and Sockets

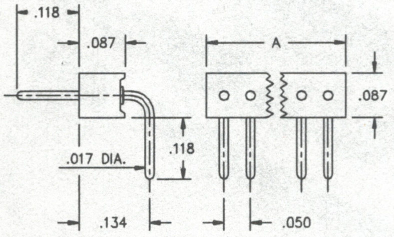
.118
.087
A
.087
.118
.017 DIA.
.134
.050

Fig. 1

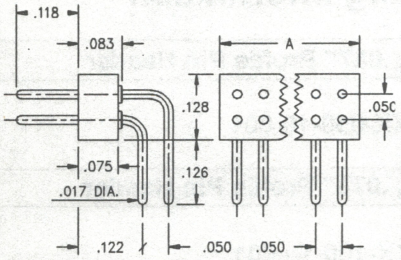
.118
.083
A
.128
.050
.075
.126
.017 DIA.
.122
.050
.050

Fig. 2

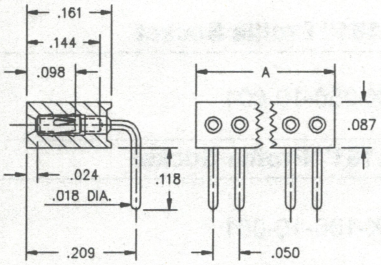
.161
.144
.098
A
.087
.024
.018 DIA.
.118
.209
.050

Fig. 3

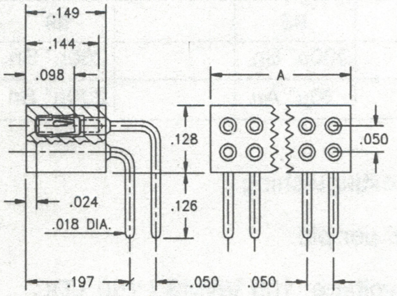
.149
.144
.098
A
.128
.050
.024
.018 DIA.
.126
.197
.050
.050

Fig. 4

- Series 850 and 851 interconnects are available in single and double row form.
- Headers (MM# 4006-1, -2) 850 & 852 have .017" dia. pins.
- Sockets (MM# 0489-1, -2) 851 & 853 accept pin dia. of .015" - .021".
- Insulators are high temp PCT.

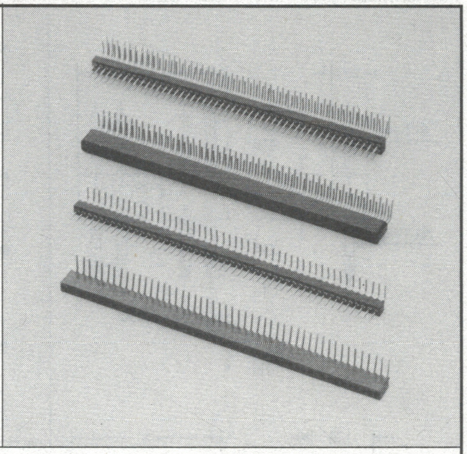

Fig.	No. of pins	A	Ordering Information
			Single Row Pin Header, Right Angle Solder Tail
1	50	2.5	850-XX-050-20-001
			Double Row Pin Header, Right Angle Solder Tail
2	2x50	2.5	852-XX-100-20-001

SPECIFY PLATING CODE XX=	10	90
Pin Plating 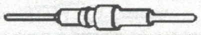	10µ" Au	200µ" Sn

Fig.	No. of pins	A	Ordering Information
			Single Row Socket, Right Angle Solder Tail
3	50	2.5	851-XX-050-20-001
			Double Row Socket, Right Angle Solder Tail
4	2x50	2.5	853-XX-100-20-001

SPECIFY PLATING CODE XX=			93		99
Sleeve (Pin) 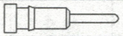			200µ" Sn		200µ" Sn
Contact (Clip)			30µ" Au		200µ" Sn

Shorter strip lengths are available "cut-to-order". Please specify total number of pins / sockets required per strip.

INTERCONNECTS
.050" Grid
Surface Mount Headers and Sockets

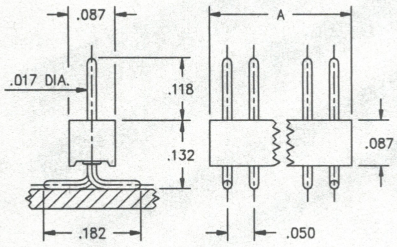
.087
.017 DIA.
.118
.132
.182
A
.087
.050

Fig. 1

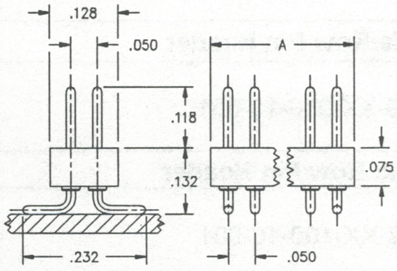
.128
.050
.118
.132
.232
A
.075
.050

Fig. 2

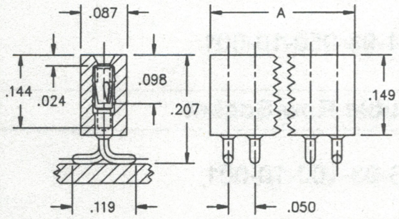
.087
.144
.024
.098
.207
.119
A
.149
.050

Fig. 3

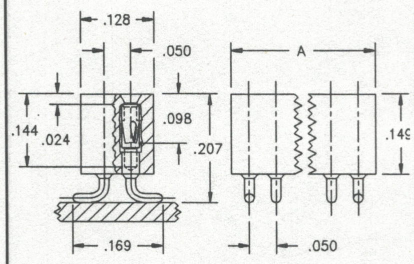
.128
.050
.144
.024
.098
.207
.169
A
.149
.050

Fig. 4

- Series 850 and 851 interconnects are available in single and double row form.
- Headers (MM# 4006) 850 & 852 have .017" dia. pins.
- Sockets (MM# 0489) 851 & 853 accept pin dia. of .015" - .021".
- Insulators are high temp PCT.

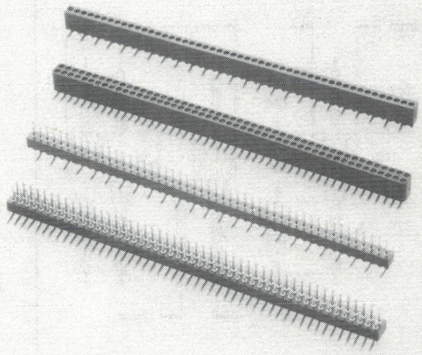

Fig.	No. of pins	A	Ordering Information
			Single Row, .132" Surface Mount Header
1	50	2.5	850-XX-050-30-001
			Double Row .132" Surface Mount Header
2	2x50	2.5	852-XX-100-30-001

SPECIFY PLATING CODE XX=		10	90
Pin Plating		10μ"Au	200μ"Sn

Fig.	No. of pins	A	Ordering Information
			Single Row, .207" Surface Mount Socket
3	50	2.5	851-XX-050-30-001
			Double Row, .207" Surface Mount Socket
4	2x50	2.5	853-XX-100-30-001

SPECIFY PLATING CODE XX=		93		99
Sleeve (Pin)	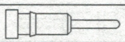	200μ" Sn		200μ" Sn
Contact (Clip)		30μ" Au		200μ" Sn

Shorter strip lengths are available "cut-to-order". Please specify total number of pins / sockets required per strip.

INTERCONNECTS
2 mm Grid
Single and Double Row

Series 830

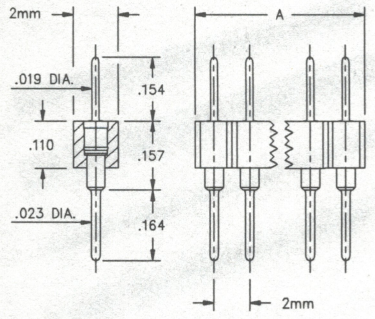

2mm
A
.019 DIA.
.154
.110
.157
.023 DIA.
.164
2mm

Fig. 1

- Series 830 single and double row interconnects have 2 mm pin spacing and permit board stacking as low as .322".
- Pin headers have .019" dia. pins. (M-M# 5012).
- Sockets use M-M# 1802 receptacles.
- Insulators are high temperature PCT polyester, suitable for all soldering operations.

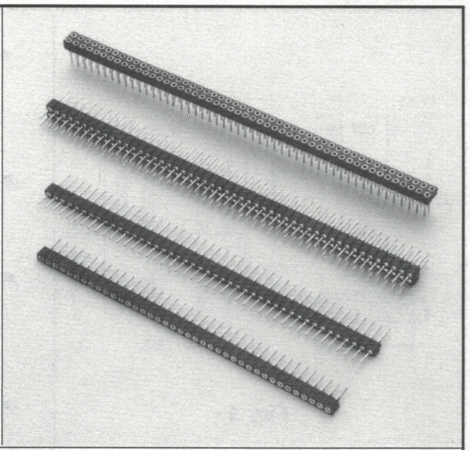

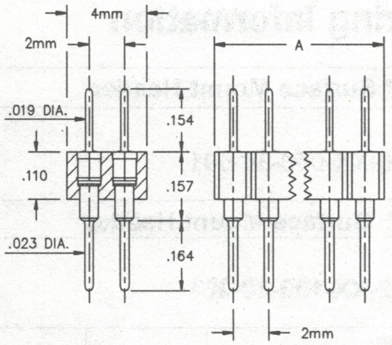

4mm
2mm
A
.019 DIA.
.154
.110
.157
.023 DIA.
.164
2mm

Fig. 2

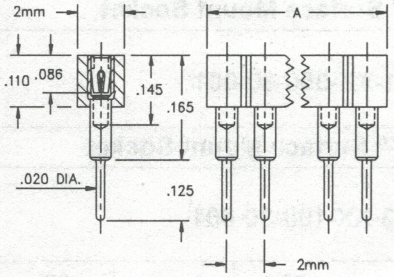

2mm
A
.110
.086
.145
.165
.020 DIA.
.125
2mm

Fig. 3

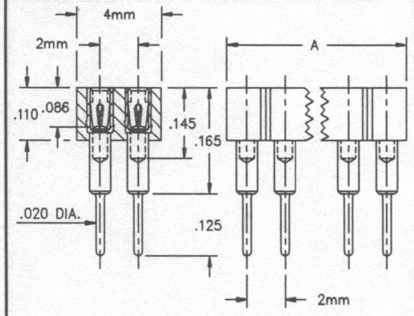

4mm
2mm
A
.110
.086
.145
.165
.020 DIA.
.125
2mm

Fig. 4

All Dimensions in inches, except where indicated.

Fig.	No. of pins	A	Ordering Information
			Single Row Pin Header
1	50	100 mm	830-XX-050-10-001
			Double Row Pin Header
2	2x50	100 mm	832-XX-100-10-001

SPECIFY PLATING CODE XX=	10	90
Pin Plating	10µ" Au	200µ" Sn

Fig.	No. of pins	A	Ordering Information
			Single Row Socket
3	50	100 mm	831-93-050-10-001
			Double Row Socket
4	2x50	100 mm	833-93-100-10-001

PLATING CODE XX=	93
Sleeve (Pin) 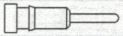	200µ" Sn
Contact (Clip)	30µ" Au

Shorter strip lengths are available "cut-to-order". Please specify total number of pins / sockets required per strip.

INTERCONNECTS
2 mm Grid
Surface Mount Headers and Sockets

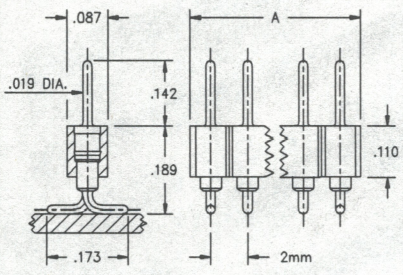
.087
A
.019 DIA.
.142
.110
.189
.173
2mm

Fig. 1

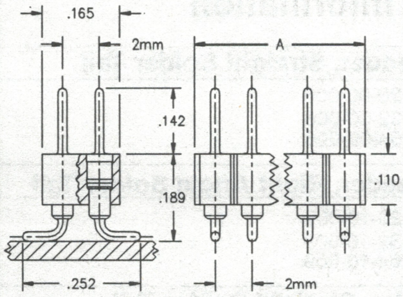
.165
2mm
A
.142
.110
.189
.252
2mm

Fig. 2

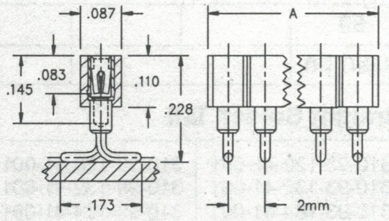
.087
A
.083
.145
.110
.228
.173
2mm

Fig. 3

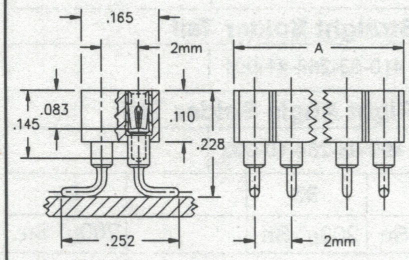
.165
2mm
A
.083
.145
.110
.228
.252
2mm

Fig. 4

All Dimensions in inches, except where indicated.

- Series 830 and 831 interconnects are available in single and double row form.
- Headers (MM# 6218) 830 & 832 have .019" dia. pins.
- Sockets (MM# 1802) 831 & 833 accept pin dia. of .015" - .025".
- Insulators are high temp PCT.

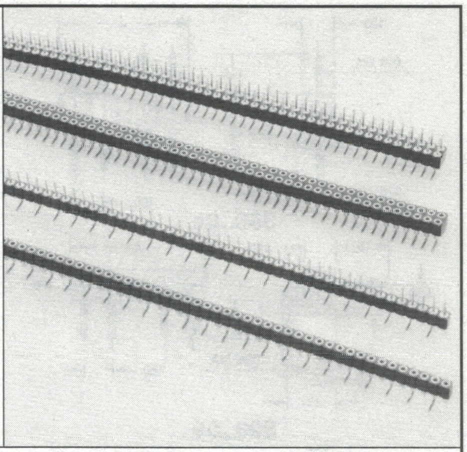

Fig.	No. of pins	A	Ordering Information
			Single Row, .189" Surface Mount Header
1	50	100 mm	830-XX-050-30-001
			Double Row .189" Surface Mount Header
2	2x50	100 mm	832-XX-100-30-001

SPECIFY PLATING CODE XX=		10	90
Pin Plating		10µ" Au	200µ" Sn

Fig.	No. of pins	A	Ordering Information
			Single Row, .228" Surface Mount Socket
3	50	100 mm	831-XX-050-30-001
			Double Row, .228" Surface Mount Socket
4	2x50	100 mm	833-XX-100-30-001

SPECIFY PLATING CODE XX=		93	99
Sleeve (Pin)	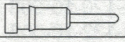	200µ" Sn	200µ" Sn
Contact (Clip)	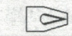	30µ" Au	200µ" Sn

Shorter strip lengths are available "cut-to-order". Please specify total number of pins / sockets required per strip.

INTERCONNECTS
.018" dia. Pins
Single and Double Row

Series 310, 350, 399
410, 450, 499

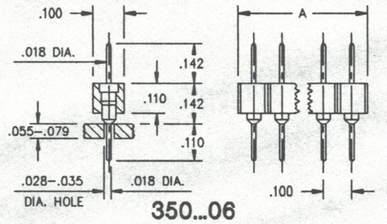

.100
A
.018 DIA.
.142
.110
.142
.055–.079
.110
.028–.035
DIA. HOLE
.018 DIA.
.100

350...06

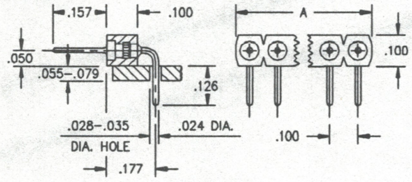

.157
.100
A
.050
.055–.079
.100
.126
.028–.035
DIA. HOLE
.024 DIA.
.100
.177

399...09

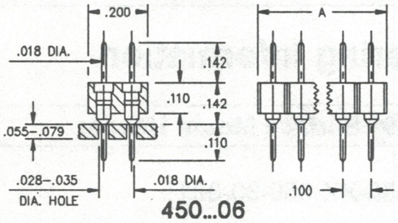

.200
A
.018 DIA.
.142
.110
.142
.055–.079
.110
.028–.035
DIA. HOLE
.018 DIA.
.100

450...06

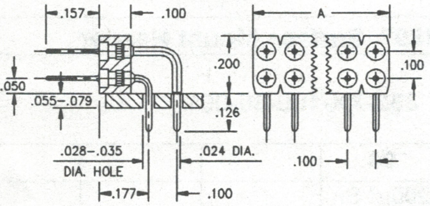

.157
.100
A
.200
.100
.050
.055–.079
.126
.028–.035
DIA. HOLE
.024 DIA.
.100
.177
.100

499...09

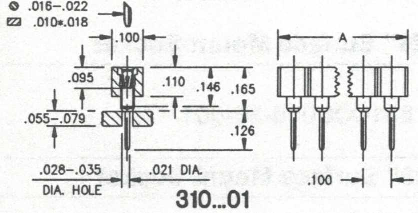

.016–.022
.010■.018
.100
.095
.110
.146
.165
.055–.079
.126
.028–.035
DIA. HOLE
.021 DIA.
.100

310...01

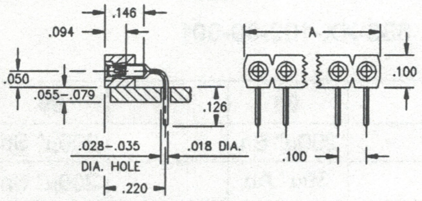

.146
.094
A
.050
.055–.079
.100
.126
.028–.035
DIA. HOLE
.018 DIA.
.100
.220

399...03

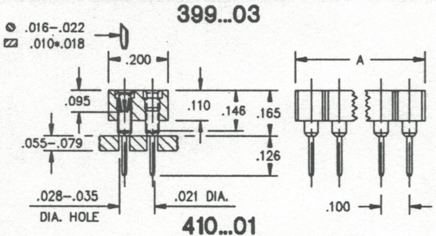

.016–.022
.010■.018
.200
A
.095
.110
.146
.165
.055–.079
.126
.028–.035
DIA. HOLE
.021 DIA.
.100

410...01

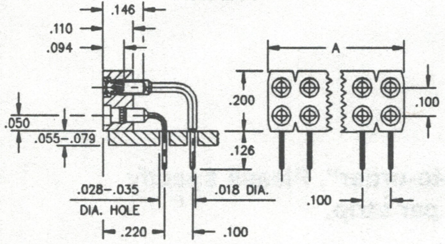

.146
.110
.094
A
.200
.100
.050
.055–.079
.126
.028–.035
DIA. HOLE
.018 DIA.
.100
.220
.100

499...03

- Series 3XX and 4XX single and double row PCB interconnects are both available with straight and right angle solder tails.
- Sockets
  310 & 410 use M-M# 1001
  399 uses M-M# 1103
  499 uses M-M# 1103, 1602
- Pins
  350 & 450 use M-M# 3404
  399 uses M-M# 5011
  499 uses M-M# 5011, 5113

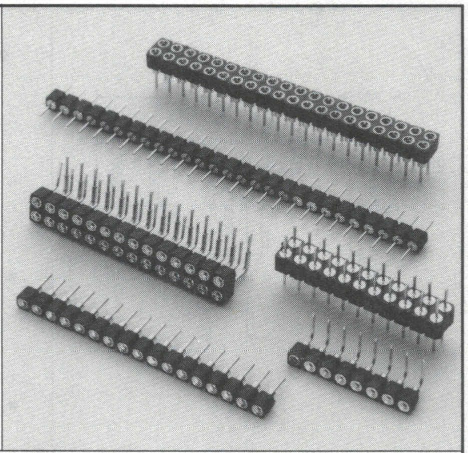

Ordering Information

No. of pins	A	
Series 350...06 Single Row Pin Header, Straight Solder Tail		
20	2.0	350-XX-120-00-006
32	3.2	350-XX-132-00-006
64	6.4	350-XX-164-00-006
Series 399...09 Single Row Pin Header, Right Angle Solder Tail		
20	2.0	399-XX-120-10-009
32	3.2	399-XX-132-10-009
64	6.4	399-XX-164-10-009
Series 450...06 Double Row Pin Header, Straight Solder Tail		
2x32	3.2	450-XX-264-00-006
Series 499...09 Double Row Pin Header, Right Angle Solder Tail		
2x32	3.2	499-XX-264-10-009

SPECIFY PLATING CODE XX=		10	90
Pin Plating		10μ" Au	200μ" Sn

Series 310...01 Single Row Socket, Straight Solder Tail					
20	2.0	310-13-120-41-001	310-91-120-41-001	310-93-120-41-001	310-99-120-41-001
32	3.2	310-13-132-41-001	310-91-132-41-001	310-93-132-41-001	310-99-132-41-001
64	6.4	310-13-164-41-001	310-91-164-41-001	310-93-164-41-001	310-99-164-41-001
Series 399...03 Single Row Socket, Right Angle Solder Tail					
20	2.0	399-13-120-10-003		399-93-120-10-003	
32	3.2	399-13-132-10-003		399-93-132-10-003	
64	6.4	399-13-164-10-003		399-93-164-10-003	
Series 410...01 Double Row Socket, Straight Solder Tail					
2x32	3.2	410-13-264-41-001		410-93-264-41-001	
Series 499...03 Double Row Socket, Right Angle Solder Tail					
2x32	3.2	499-13-264-10-003		499-93-264-10-003	

SPECIFY PLATING CODE XX=		13	91	93	99
Sleeve (Pin)	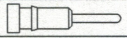	10μ" Au	200μ" Sn	200μ" Sn	200μ" Sn
Contact (Clip)		30μ" Au	10μ" Au	30μ" Au	200μ" Sn

Shorter strip lengths are available "cut-to-order". Please specify total number of pins / sockets required per strip.

INTERCONNECTS
Low Profile, .018" dia. Pins
Single and Double Row

Series 335, 364
435, 464

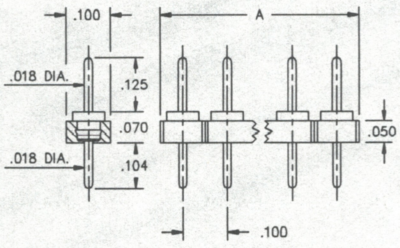
.100
A
.018 DIA.
.125
.070
.050
.018 DIA.
.104
.100

Fig. 1

- Series 335 and 435 single and double row PCB interconnects offer lowest profile available.
- Series 364 and 464 single and double row PCB interconnects offer .085" profile above board.
- Series 335 and 435 use M-M# 3516 pins.

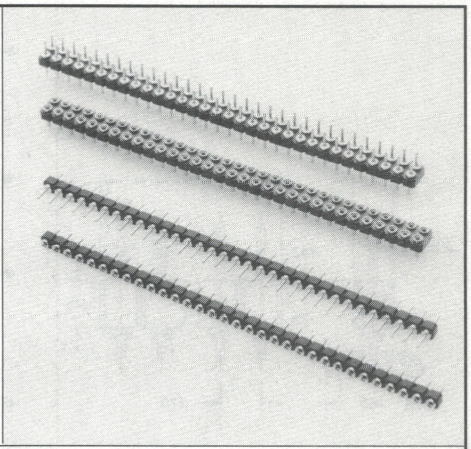

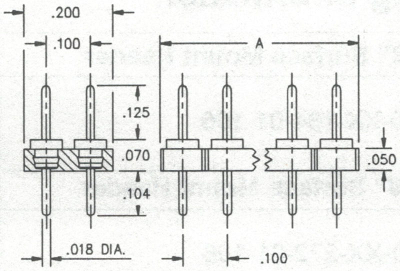
.200
.100
A
.125
.070
.050
.104
.018 DIA.
.100

Fig. 2

Fig.	No. of pins	A	Ordering Information
			Single Row, .070" Profile Pin Header
1	32	3.2	335-XX-132-00-160
			Double Row, .070" Profile Pin Header
2	2x36	3.6	435-XX-272-00-160
			Single Row, .085" Profile Pin Header
3	32	3.2	364-XX-132-00-580
			Double Row, .085" Profile Pin Header
4	2x36	3.6	464-XX-272-00-580

SPECIFY PLATING CODE XX=	10	90
Pin Plating	10µ" Au	200µ" Sn

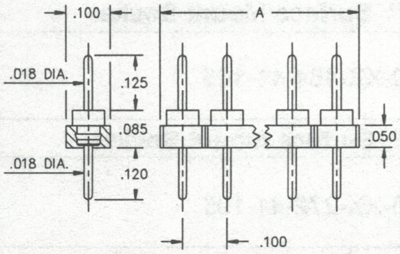
.100
A
.018 DIA.
.125
.085
.050
.018 DIA.
.120
.100

Fig. 3

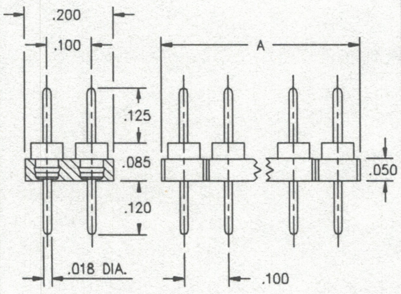
.200
.100
A
.125
.085
.050
.120
.018 DIA.
.100

Fig. 4

Shorter strip lengths are available "cut-to-order". Please specify total number of pins / sockets required per strip.

INTERCONNECTS .018" dia. Pins Surface Mount Headers and Sockets

Series 310, 350
410, 450

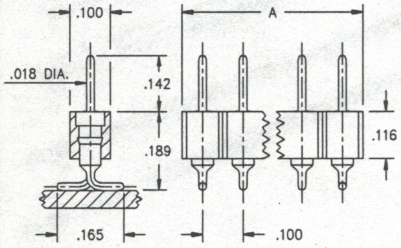
.100
A
.018 DIA.
.142
.189
.116
.165
.100

Fig. 1

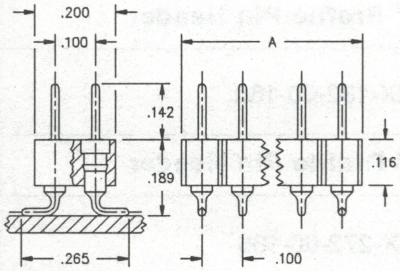
.200
.100
A
.142
.116
.189
.265
.100

Fig. 2

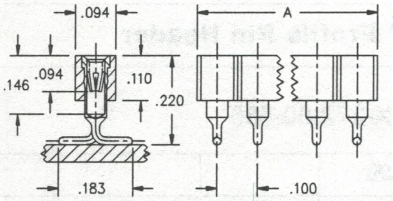
.094
A
.146
.094
.110
.220
.183
.100

Fig. 3

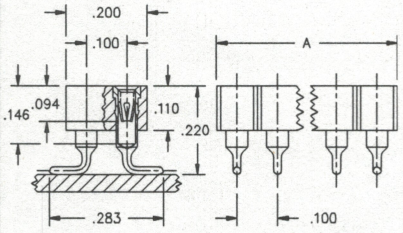
.200
.100
A
.146
.094
.110
.220
.283
.100

Fig. 4

- Series 310 and 350 interconnects are available in single and double row form.
- Headers (MM# 3404) 350 & 450 have .018" dia. pins.
- Sockets (MM# 1005) 310 & 410 accept pin dia. of .015" - .025".
- Insulators are high temp PCT.

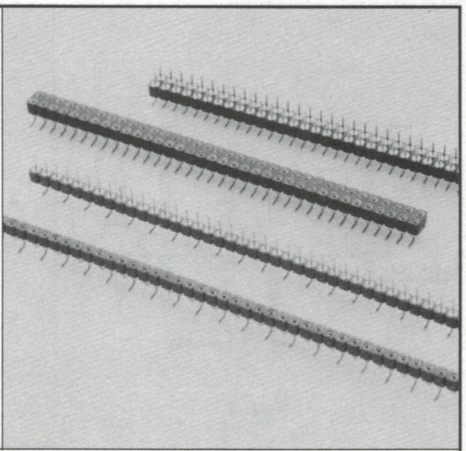

Fig.	No. of pins	A	Ordering Information
			Single Row, .189" Surface Mount Header
1	64	6.4	350-XX-164-01-106
			Double Row, .189" Surface Mount Header
2	2x36	3.6	450-XX-272-01-106

SPECIFY PLATING CODE XX=	10	90		
Pin Plating	10μ" Au	200μ" Sn		

Fig.	No. of pins	A	Ordering Information
			Single Row, .220" Surface Mount Socket
3	64	6.4	310-XX-164-41-105
			Double Row .220" Surface Mount Socket
4	2x36	3.6	410-XX-272-41-105

SPECIFY PLATING CODE XX=			93		99
Sleeve (Pin) 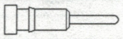			200μ" Sn		200μ" Sn
Contact (Clip)			30μ" Au		200μ" Sn

Shorter strip lengths are available "cut-to-order". Please specify total number of pins / sockets required per strip.

INTERCONNECTS
.030" dia. Pins
Single and Double Row

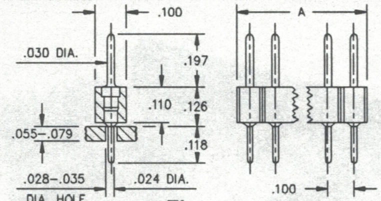
.100
.030 DIA.
.197
.110
.126
.055–.079
.118
.028–.035
DIA. HOLE
.024 DIA.
A
.100

Fig. 1

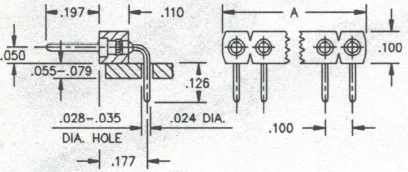
.197
.110
A
.050
.055–.079
.100
.126
.028–.035
DIA. HOLE
.024 DIA.
.100
.177

Fig. 2

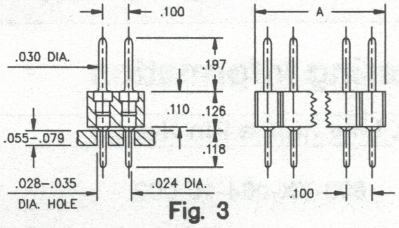
.100
A
.030 DIA.
.197
.110
.126
.055–.079
.118
.028–.035
DIA. HOLE
.024 DIA.
.100

Fig. 3

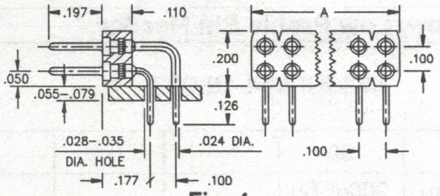
.197
.110
A
.200
.100
.050
.055–.079
.126
.028–.035
DIA. HOLE
.024 DIA.
.100
.177
.100

Fig. 4

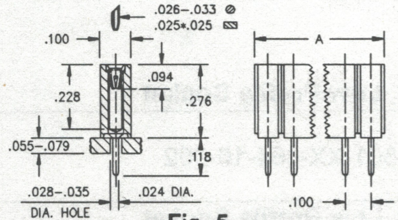
.026–.033 ⌀
.025▪.025
.100
A
.094
.228
.276
.055–.079
.118
.028–.035
DIA. HOLE
.024 DIA.
.100

Fig. 5

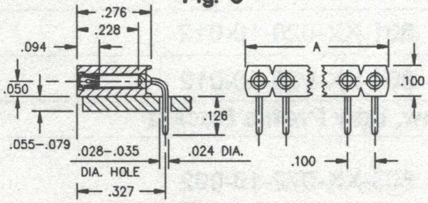
.276
.228
.094
A
.050
.100
.126
.055–.079
.028–.035
DIA. HOLE
.024 DIA.
.100
.327

Fig. 6

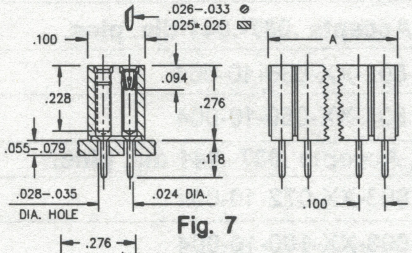
.026–.033 ⌀
.025▪.025
.100
.094
.228
.276
.055–.079
.118
.028–.035
DIA. HOLE
.024 DIA.
.100

Fig. 7

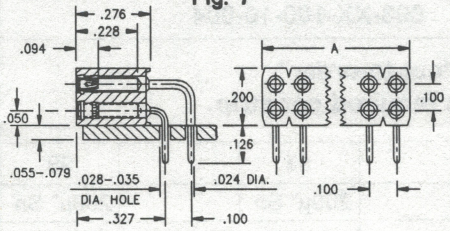
.276
.228
.094
A
.200
.100
.050
.126
.055–.079
.028–.035
DIA. HOLE
.024 DIA.
.100
.327
.100

Fig. 8

- Receptacles accept .030" diameter and .025" square pins such as Series 890 and 892 pin headers.
- Clips have a current rating of 4.5A.
- Pin interconnects available with straight (M-M# 7007) or right angle (M-M# 5005, 5107) solder tails.
- Sockets are available with straight (M-M# 1304) or right angle (M-M# 1305, 1306) solder tails.

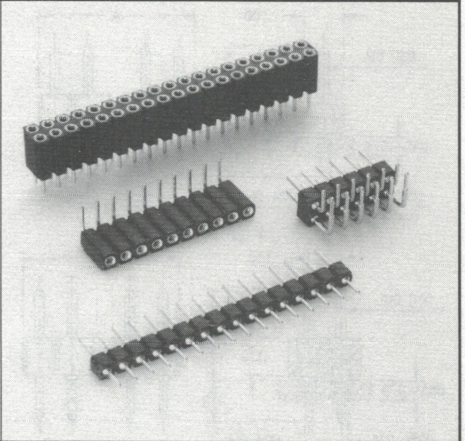

Ordering Information

Fig.	No. of pins	A	Ordering Information
			Single Row Pin Header, Straight Solder Tail
1	64	6.4	800-XX-064-10-001
			Single Row Pin Header, Right Angle Solder Tail
2	64	6.4	800-XX-064-20-001
			Double Row Pin Header, Straight Solder Tail
3	2x32	3.2	802-XX-064-10-001
			Double Row Pin Header, Right Angle Solder Tail
4	2x32	3.2	802-XX-064-20-001

SPECIFY PLATING CODE XX=		10	90
Pin Plating		10µ" Au	200µ" Sn

Fig.	No. of pins	A	Ordering Information
			Single Row Socket, Straight Solder Tail
5	36	3.6	801-XX-036-10-001
	50	5.0	801-XX-050-10-001
			Single Row Socket, Right Angle Solder Tail
6	36	3.6	801-XX-036-20-001
	50	5.0	801-XX-050-20-001
			Double Row Socket, Straight Solder Tail
7	2x36	3.6	803-XX-072-10-001
	2x50	5.0	803-XX-100-10-001
			Double Row Socket, Right Angle Solder Tail
8	2x36	3.6	803-XX-072-20-001
	2x50	5.0	803-XX-100-20-001

Shorter strip lengths are available "cut-to-order", consult factory.

SPECIFY PLATING CODE XX=		93	99
Sleeve (Pin)	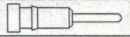	200µ" Sn	200µ" Sn
Contact (Clip)		30µ" Au	200µ" Sn

INTERCONNECTS
.030" dia. Low Profile and .040" dia. Pins
Single and Double Row

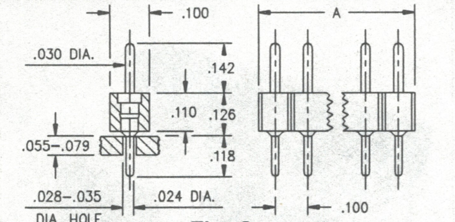
.100
A
.030 DIA.
.142
.110
.126
.055–.079
.118
.028–.035
DIA. HOLE
.024 DIA.
.100

Fig. 9

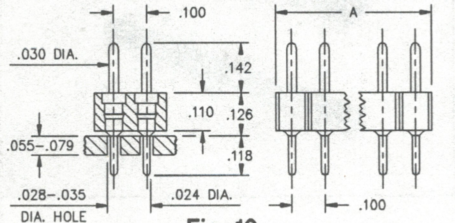
.100
A
.030 DIA.
.142
.110
.126
.055–.079
.118
.028–.035
DIA. HOLE
.024 DIA.
.100

Fig. 10

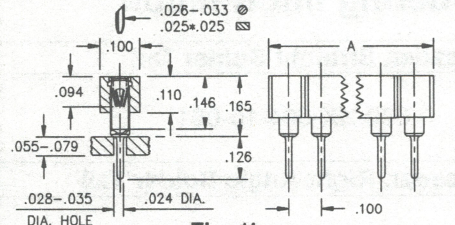
.026–.033 ⌀
.025•.025 ▨
.100
A
.094
.110
.146
.165
.055–.079
.126
.028–.035
DIA. HOLE
.024 DIA.
.100

Fig. 11

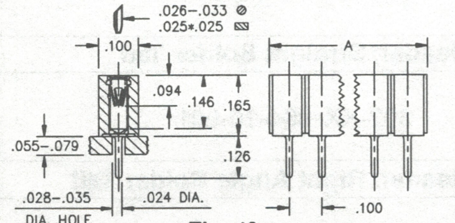
.026–.033 ⌀
.025•.025 ▨
.100
A
.094
.146
.165
.055–.079
.126
.028–.035
DIA. HOLE
.024 DIA.
.100

Fig. 12

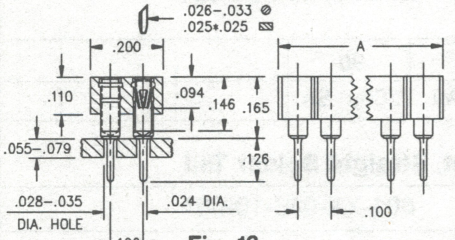
.026–.033 ⌀
.025•.025 ▨
.200
A
.110
.094
.146
.165
.055–.079
.126
.028–.035
DIA. HOLE
.024 DIA.
.100
.100

Fig. 13

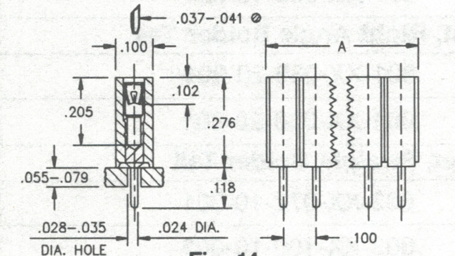
.037–.041 ⌀
.100
A
.102
.205
.276
.055–.079
.118
.028–.035
DIA. HOLE
.024 DIA.
.100

Fig. 14

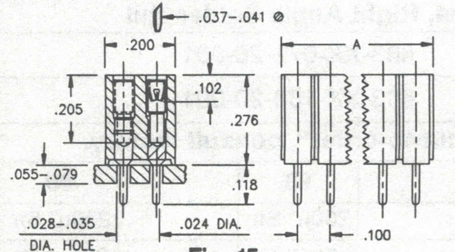
.037–.041 ⌀
.200
A
.102
.205
.276
.055–.079
.118
.028–.035
DIA. HOLE
.024 DIA.
.100

Fig. 15

- Receptacles accept .030" diameter and .025" square pins. Series 80X...10-004 receptacles accept .037"-.041" diameter pins. (M-M# 1313)
- Six finger, Hi-Rel clips have a current rating of 4.5A.
- Pin headers use M-M# 5016 pins.
- Low profile sockets use M-M# 1303 pins.

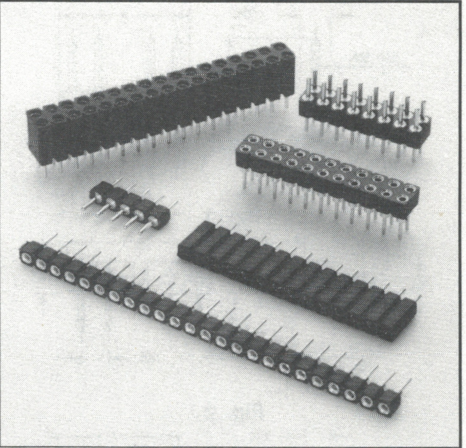

Fig.	No. of pins	A	Ordering Information
			Single Row, Low Profile Pin Header
9	64	6.4	800-XX-064-10-002
			Double Row, Low Profile Pin Header
10	2x32	3.2	802-XX-064-10-002

SPECIFY PLATING CODE XX=	10	90
Pin Plating	10µ" Au	200µ" Sn

Fig.	No. of pins	A	
			Single Row, Low Profile Socket
11	64	6.4	801-XX-064-10-002
			Single Row, Low Profile Socket
12	20	2.0	801-XX-020-10-012
	36	3.6	801-XX-036-10-012
			Double Row, Low Profile Socket
13	2x36	3.6	803-XX-072-10-002
			Single Row Socket, Accepts .037-.041 dia. pins.
14	36	3.6	801-XX-036-10-004
	50	5.0	801-XX-050-10-004
			Double Row Socket, Accepts .037-.041 dia. pins.
15	2x36	3.6	803-XX-072-10-004
	2x50	5.0	803-XX-100-10-004

Shorter strip lengths are available "cut-to-order". Please specify total number of pins required per strip.

SPECIFY PLATING CODE XX=	93	99
Sleeve (Pin)	200µ" Sn	200µ" Sn
Contact (Clip)	30µ" Au	200µ" Sn

INTERCONNECTS
Solderless Press-Fit Compliant Tail

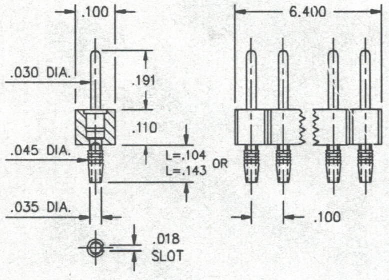
.100
6.400
.030 DIA.
.191
.110
.045 DIA.
L=.104 OR
L=.143
.035 DIA.
.100
.018
SLOT

Fig. 1

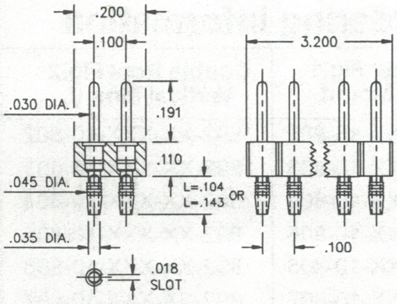
.200
.100
3.200
.030 DIA.
.191
.110
.045 DIA.
L=.104 OR
L=.143
.035 DIA.
.100
.018
SLOT

Fig. 2

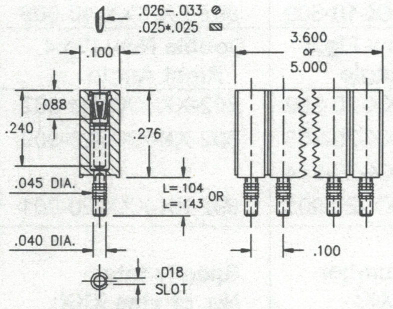
.026–.033 ⌀
.025▪.025 ▨
.100
3.600
or
5.000
.088
.240
.276
.045 DIA.
L=.104 OR
L=.143
.040 DIA.
.100
.018
SLOT

Fig. 3

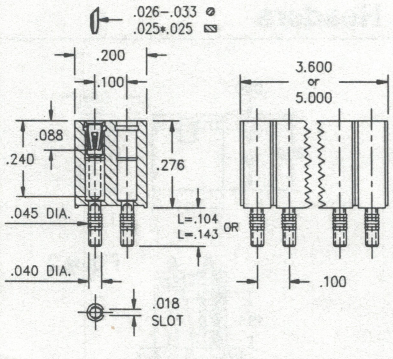
.026–.033 ⌀
.025▪.025 ▨
.200
.100
3.600
or
5.000
.088
.240
.276
.045 DIA.
L=.104 OR
L=.143
.040 DIA.
.100
.018
SLOT

Fig. 4

- The unique compliant tail pins conform to .040" ±.003 finished hole without stressing inner layers.
- Pin headers are offered in two tail lengths for .060"-.100" (M-M# 5601) and .090"-.130" (M-M# 5602) thick panels.
- Sockets use Hi-Rel, six-finger clips which accept .030" dia. pins and also .025" square pins. (M-M# 4614 or 4615).

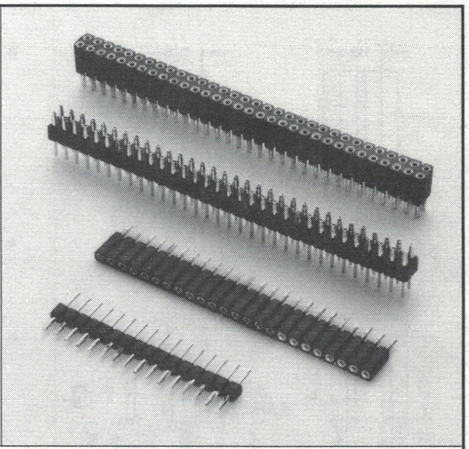

Ordering Information

Fig.	No. of pins	L=.104 (for .060 - .100" thick panel)	L=.143 (for .090 - .130" thick panel)
		Single Row Pin Header	
1	64	800-XX-064-61-001	800-XX-064-62-001
		Double Row Pin Header	
2	2X32	802-XX-064-61-001	802-XX-064-62-001

SPECIFY PLATING CODE XX=		10	90
Pin Plating		10µ" Au	200µ" Sn

Fig.	No. of pins	L=.104	L=.143
		Single Row Socket	
3	36	801-XX-036-61-001	801-XX-036-62-001
	50	801-XX-050-61-001	801-XX-050-62-001
		Double Row Socket	
4	2X36	803-XX-072-61-001	803-XX-072-62-001
	2X50	803-XX-100-61-001	803-XX-100-62-001

For more information on compliant tail pins see page 17.

Shorter strip lengths are available "cut-to-order". Please specify total number of pins / sockets required per strip.

SPECIFY PLATING CODE XX=		93	99
Sleeve (Pin)	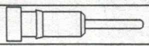	200µ" Sn	200µ" Sn
Contact (Clip)		30µ" Au	200µ" Sn

INTERCONNECTS
.025" Square Pin Headers and Jumpers

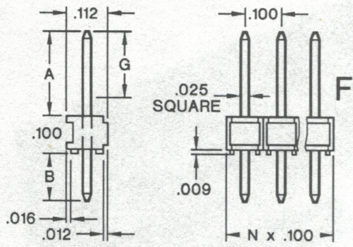
.112
.100
G
A
.025
SQUARE
.100
B
.009
.016
.012
N x .100

Fig. 1

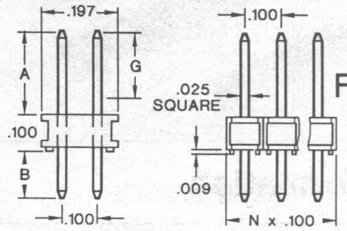
.197
.100
G
A
.025
SQUARE
.100
B
.009
.100
N x .100

Fig. 2

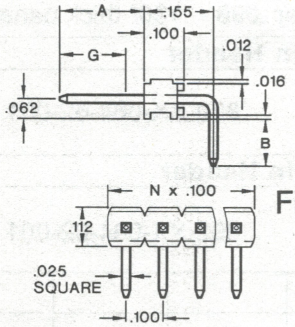
A
.155
.100
.012
G
.016
.062
B
N x .100
.112
.025
SQUARE
.100

Fig. 3

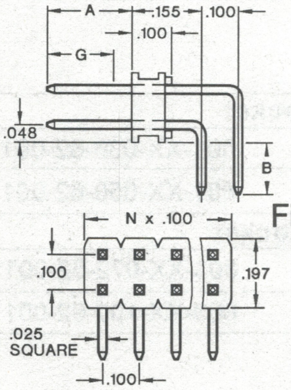
A
.155
.100
.100
G
.048
B
N x .100
.100
.197
.025
SQUARE
.100

Fig. 4

- Square pin headers may be used as board-to-board interconnects using series 801, 803 socket strips; or as a hardware programming switch with series 999 color coded jumpers.
- Single and double row strips are available with straight or right angle solder tails.
- Series 999 color coded jumpers are offered in closed, and open insulators for longer pins.

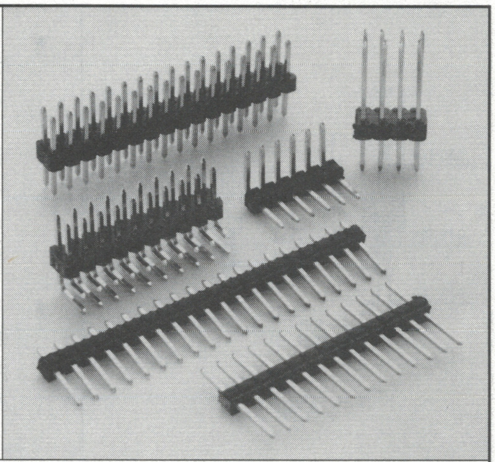

Ordering Information

PIN LENGTH A	TAIL LENGTH B	LENGTH OF SELECTIVE GOLD G min.	Single Row Fig.1 Vertical Mount	Double Row Fig.2 Vertical Mount
.230	.100	.180	890-XX-XXX-10-802	892-XX-XXX-10-802
.230	.115	.180	890-XX-XXX-10-803	892-XX-XXX-10-803
.230	.135	.180	890-XX-XXX-10-804	892-XX-XXX-10-804
.230	.200	.180	890-XX-XXX-10-805	892-XX-XXX-10-805
.230	.300	.180	890-XX-XXX-10-806	892-XX-XXX-10-806
.230	.400	.180	890-XX-XXX-10-807	892-XX-XXX-10-807
.230	.500	.180	890-XX-XXX-10-808	892-XX-XXX-10-808
.265	.125	.215	890-XX-XXX-10-800	892-XX-XXX-10-800
.275	.400	.225	890-XX-XXX-10-801	892-XX-XXX-10-801
.335	.100	.285	890-XX-XXX-10-809	892-XX-XXX-10-809
			Single Row Fig.3 Right Angle	**Double Row Fig.4 Right Angle**
.230	.100	.180	890-XX-XXX-20-902	892-XX-XXX-20-902
.230	.135	.180	890-XX-XXX-20-903	892-XX-XXX-20-903
.230	.200	.180	890-XX-XXX-20-904	
.265	.125	.215	890-XX-XXX-20-901	892-XX-XXX-20-901

Specify Plating Code XX=

	PIN	TAIL
19=	10μ" Gold	150μ"SnPb
39=	30μ" Gold	150μ"SnPb
90=	150μ" SnPb	150μ"SnPb

Specify number of pins XXX:
From 002
To 036

Specify total No. of pins XXX:
From 004 (2x2)
To 072 (2x36)

Jumpers
For .025" Square Pin Headers

Ordering Information

Insulator Color	Closed Insulator Figure 1	Open Insulator Figure 2
BLACK	999-XX-210-00-000	999-XX-310-00-000
RED	999-XX-210-02-000	999-XX-310-02-000
YELLOW	999-XX-210-04-000	999-XX-310-04-000
GREEN	999-XX-210-05-000	999-XX-310-05-000
BLUE	999-XX-210-06-000	999-XX-310-06-000
GRAY	999-XX-210-08-000	999-XX-310-08-000
WHITE	999-XX-210-09-000	999-XX-310-09-000

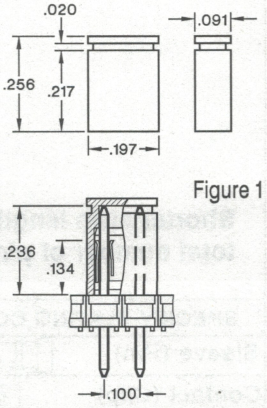
.020
.091
.256
.217
.197
.236
.134
.100

Figure 1

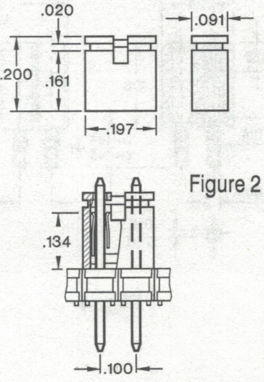
.020
.091
.200
.161
.197
.134
.100

Figure 2

INTERCONNECTS .025” Square Pin Headers Surface Mount

- Single and double row strips, vertical mount and single row strip, parallel mount.
- Various pin lengths are offered, plus the economy of selective gold plating.
- Up to 100 pin position strips.
- High temp PPS insulator.

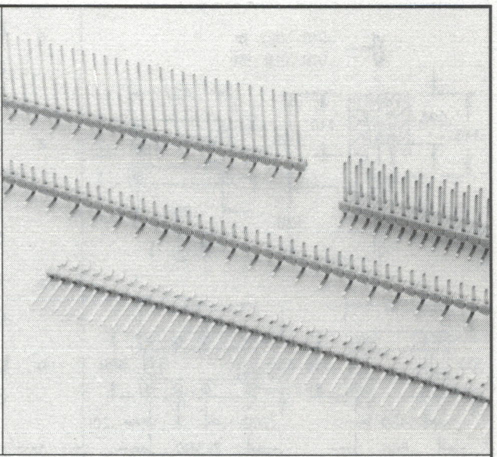

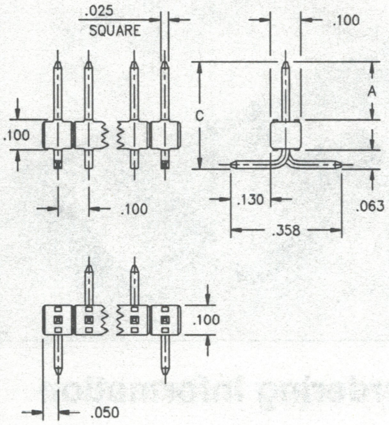
.025
SQUARE
.100
.100
A
C
.100
.130
.063
.358
.100
.050

Fig. 1

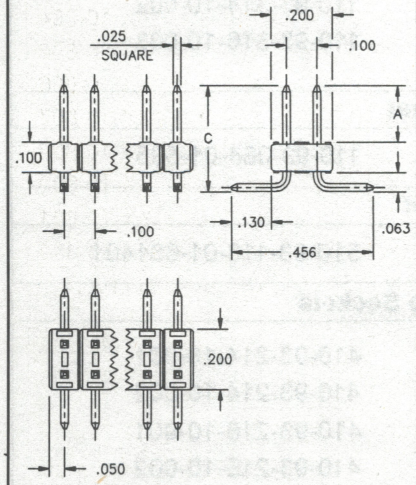
.025
SQUARE
.200
.100
.100
A
C
.100
.130
.063
.456
.200
.050

Fig. 2

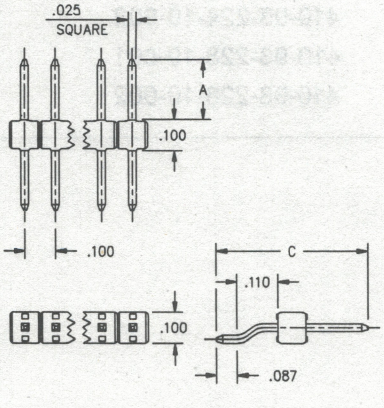
.025
SQUARE
A
.100
.100
C
.110
.100
.087

Fig. 3

Ordering Information

PIN LENGTH **A**	OVERALL HEIGHT **C**	**Single Row Fig.1 Vertical Mount**	**Double Row Fig.2 Vertical Mount**
.138	.300	890-XX-XXX-10-601	892-XX-XXX-10-601
.189	.350	890-XX-XXX-10-602	892-XX-XXX-10-602
.272	.433	890-XX-XXX-10-603	892-XX-XXX-10-603
.343	.504	890-XX-XXX-10-604	892-XX-XXX-10-604
.390	.551	890-XX-XXX-10-605	892-XX-XXX-10-605
.472	.634	890-XX-XXX-10-606	892-XX-XXX-10-606
.543	.705	890-XX-XXX-10-607	892-XX-XXX-10-607
.591	.752	890-XX-XXX-10-608	892-XX-XXX-10-608
.673	.835	890-XX-XXX-10-609	892-XX-XXX-10-609
		Single Row Fig.3 Parallel Mount	
.146	.441	890-XX-XXX-20-701	
.197	.492	890-XX-XXX-20-702	
.280	.575	890-XX-XXX-20-703	
.350	.646	890-XX-XXX-20-704	

Specify Plating Code XX=

PIN	TAIL
19= 10μ“ Gold	150μ“SnPb
39= 30μ“ Gold	150μ“SnPb
90= 150μ“ SnPb	150μ“SnPb

Specify number of pins XXX:
From 002
To 050

Specify total No. of pins XXX:
From 004 (2x2)
To 100 (2x50)

RECOMMENDED P.C.B. LAYOUT

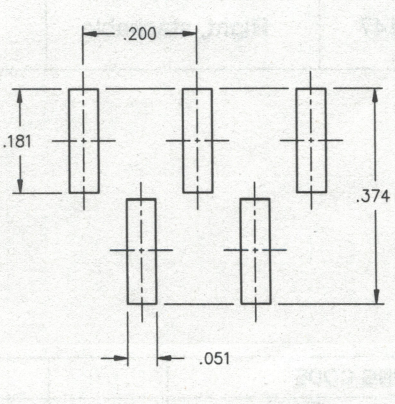
.200
.181
.374
.051

Fig. 1

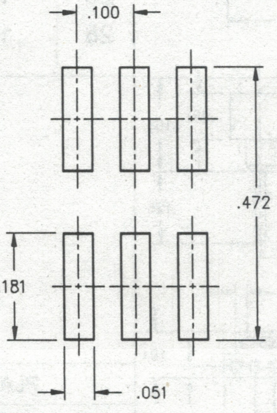
.100
.472
.181
.051

Fig. 2

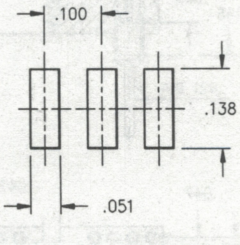

Fig. 3

SPECIALTY PRODUCTS
Relay, Quad, Zig-Zag & Turbocache Sockets

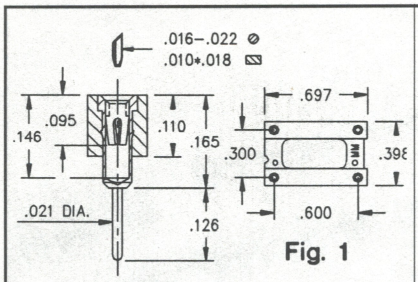
.016–.022 ⌀
.010×.018 ▨
.697
.095
.146
.110
.165
.300
.398
.021 DIA.
.126
.600

Fig. 1

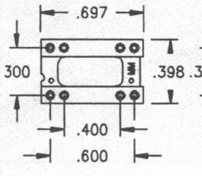
.697
300
.398
.400
.600

Fig. 2

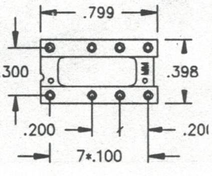
.799
.300
.398
.200
.20
7×.100

Fig. 3

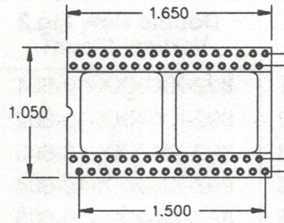
1.650
1.050
.750
.950
1.500

Fig. 4

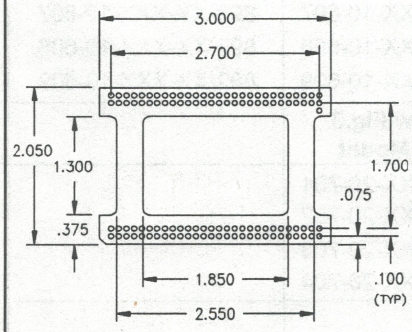
3.000
2.700
2.050
1.300
1.700
.075
.375
1.850
.100 (TYP)
2.550

Fig. 5

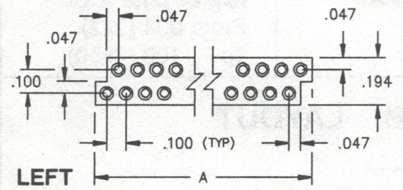
.047
(TYP) .047
.047
.100
.194
.100 (TYP)
.047
A

LEFT

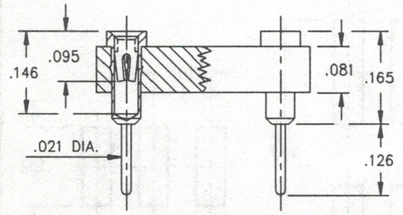
.095
.146
.081
.165
.021 DIA.
.126

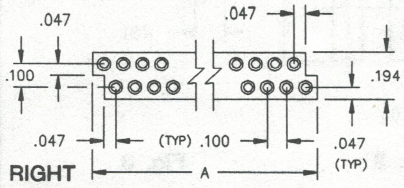
.047
.047
.100
.194
.047
(TYP) .100
.047 (TYP)
A

RIGHT

- Relay & Turbocache sockets accept devices with I/O pins on .100” grid.
- Zig-Zag strip and Quad-in-Line sockets are suitable for IC’s and memory chips with staggered double row patterns.
- Insulator is molded PBT polyester except for Turbocache socket.
- Uses M-M# 1001 pin. See page 91 for details.

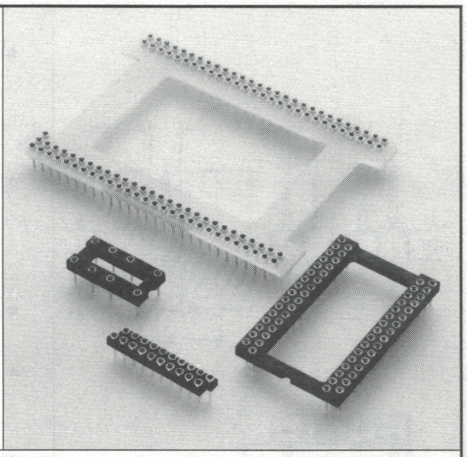

No. of pins	A	Insulator Body	Ordering Information
Selectively Loaded Sockets For Dual-In-Line Relays			
4	Fig.1	Page 7, Fig 6	110-93-314-10-001
8	Fig.2	Page 7, Fig 6	110-93-314-10-002
8	Fig.3	Page 7, Fig 7	110-93-316-10-003
Quad-In-Line Socket			
64	Fig.4		110-93-064-01-505
Turbocache Socket			
113	Fig.5		510-93-113-01-681401
Staggered (Zig-Zag) Strip Sockets			
14	0.747	Left, stackable	410-93-214-10-001
14	0.747	Right, stackable	410-93-214-10-002
16	0.847	Left, stackable	410-93-216-10-001
16	0.847	Right, stackable	410-93-216-10-002
20	1.047	Left, stackable	410-93-220-10-001
20	1.047	Right, stackable	410-93-220-10-002
24	1.247	Left, stackable	410-93-224-10-001
24	1.247	Right, stackable	410-93-224-10-002
28	1.447	Left, stackable	410-93-228-10-001
28	1.447	Right, stackable	410-93-228-10-002

PLATING CODE	93
Sleeve (Pin)	200μ” Sn
Contact (Clip)	30μ” Au

SPECIALTY PRODUCTS
Shrink DIP Sockets and Strips
Solder Tail and Wrapost

Series 117, 127, 217, 227, 317, 327

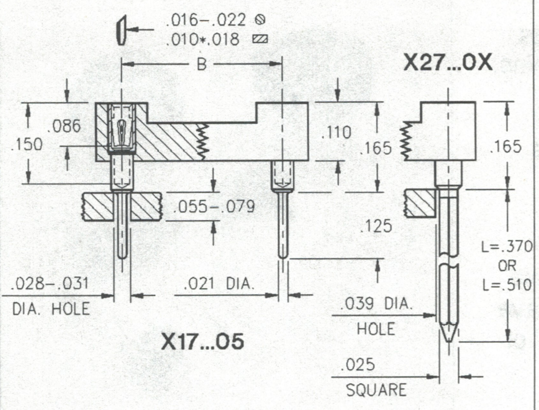

- High density DIP sockets and strips for devices featuring .070" lead spacing.
- Hi-Rel, 4-finger #30 clip meets high vibration and shock requirements. See page 157 for details.
- Solder tail is M-M# 1802 pin. Wraposts are M-M# 1702-2 or 1703-3 pins. See pages 95 & 115 for details.

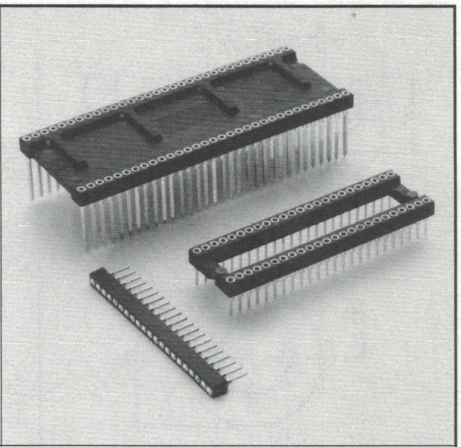

Ordering Information

No. of pins	A 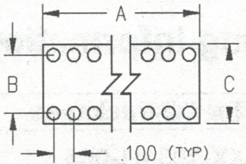	B	C	Insulator body (see page 9)	Solder Tail	2 Level Wrapost L = .370	3 Level Wrapost L = .510
					OPEN FRAME DIP SOCKET		
16	0.572	0.3	0.39	Fig.70	117-93-316-41-005	127-93-316-41-002	127-93-316-41-003
28	0.992	0.4	0.49	Fig.71	117-93-428-41-005	127-93-428-41-002	127-93-428-41-003
30	1.062	0.4	0.49	Fig.72	117-93-430-41-005	127-93-430-41-002	127-93-430-41-003
48	1.692	0.4	0.49	Fig.73	117-93-448-41-005	127-93-448-41-002	127-93-448-41-003
20	0.712	0.4	0.49	Fig.74	117-93-620-41-005	127-93-620-41-002	127-93-620-41-003
28	0.992	0.6	0.69	Fig.75	117-93-628-41-005	127-93-628-41-002	127-93-628-41-003
40	1.412	0.6	0.69	Fig.76	117-93-640-41-005	127-93-640-41-002	127-93-640-41-003
42	1.482	0.6	0.69	Fig.77	117-93-642-41-005	127-93-642-41-002	127-93-642-41-003
48	1.692	0.6	0.69	Fig.78	117-93-648-41-005	127-93-648-41-002	127-93-648-41-003
52	1.832	0.6	0.69	Fig.79	117-93-652-41-005	127-93-652-41-002	127-93-652-41-003
56	1.972	0.6	0.69	Fig.80	117-93-656-41-005	127-93-656-41-002	127-93-656-41-003
64	2.252	0.6	0.69	Fig.81	117-93-664-41-005	127-93-664-41-002	127-93-664-41-003
68	2.392	0.6	0.69	Fig.82	117-93-668-41-005	127-93-668-41-002	127-93-668-41-003
64	2.252	0.75	0.84	Fig.83	117-93-764-41-005	127-93-764-41-002	127-93-764-41-003
					CLOSED FRAME DIP SOCKET		
64	2.252	0.75	0.84	Fig.84	217-93-764-41-005	227-93-764-41-002	227-93-764-41-003
					SINGLE ROW STRIP SOCKET If desired, we will supply any length up to 21 pins.		
21	1.482				317-93-121-41-005	327-93-121-41-002	327-93-121-41-003

PLATING CODE	93
Sleeve (Pin)	200µ" Sn
Contact (Clip)	30µ" Au

SPECIALTY PRODUCTS
Transistor Sockets
.022" dia. Jumpers

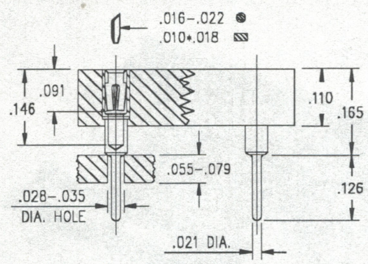
.016–.022
.010•.018
.091
.146
.110
.165
.055–.079
.028–.035
DIA. HOLE
.126
.021 DIA.

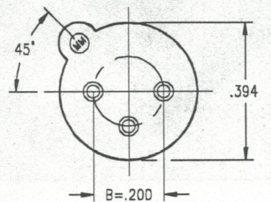

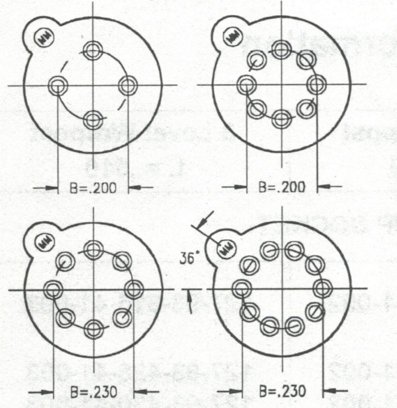
B=.200
B=.200
36°
B=.230
B=.230

- Series 917 TO package sockets are available in 3,4,8 and 10 pins.
- Two 8 pin versions feature pin centers on .200" or .230" circle.
- Uses Mill-Max # 1705 pin, see page 94 for details.
- Series 999 jumpers are available with or without insulator and have .022" diameter pins with .1",.2" or .3" center spacing.

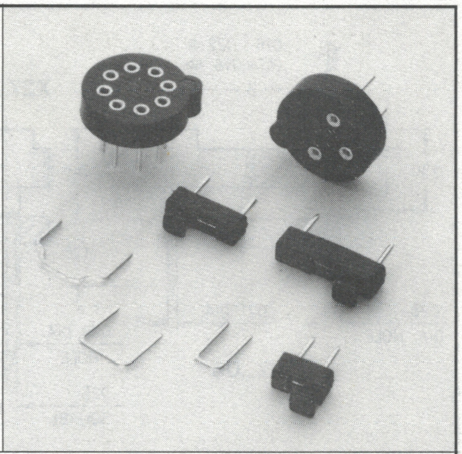

Ordering Information

Type	B Dim.	No. of Pins	Sockets for TO-Packages
Series 917			
TO-5	0.200	3	917-XX-103-41-005
TO-5	0.200	4	917-XX-104-41-005
TO-5	0.200	8	917-XX-108-41-005
TO-100	0.230	8	917-XX-208-41-005
TO-100	0.230	10	917-XX-210-41-005

SPECIFY PLATING CODE XX=	93	99
Sleeve (Pin)	200μ" Sn	200μ" Sn
Contact (Clip)	30μ" Au	200μ" Sn

Series 999 JUMPERS

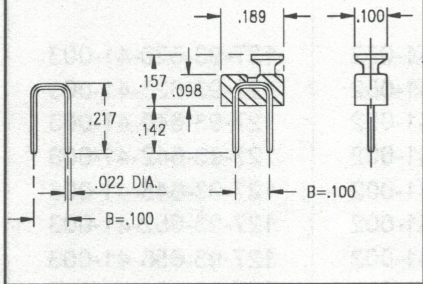
.189
.100
.157
.098
.217
.142
.022 DIA.
B=.100
B=.100

B Dim.	Color / Style	Ordering Information	
0.100	black	999-11-210-10-000	999-11-210-90-000
0.100	red	999-11-210-11-000	999-11-210-91-000
0.100	blue	999-11-210-12-000	999-11-210-92-000
0.100	not insulated	999-11-110-10-000	999-11-110-90-000
	Platings available	10μ" Au	200μ" Sn

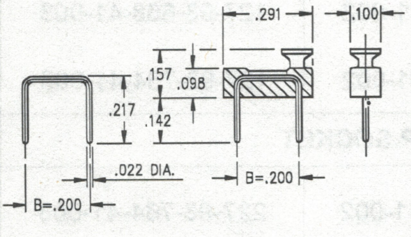
.291
.100
.157
.098
.217
.142
.022 DIA.
B=.200
B=.200

B Dim.	Color / Style	Ordering Information	
0.200	black	999-11-220-10-000	999-11-220-90-000
0.200	red	999-11-220-11-000	999-11-220-91-000
0.200	blue	999-11-220-12-000	999-11-220-92-000
0.200	not insulated	999-11-112-10-000	999-11-112-90-000
	Platings available	10μ" Au	200μ" Sn

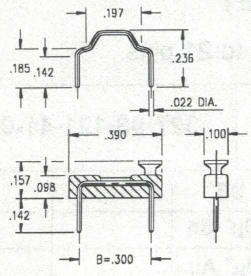
.197
.185
.142
.236
.022 DIA.
.390
.100
.157
.098
.142
B=.300

B Dim.	Color / Style	Ordering Information	
0.300	black	999-11-230-10-000	999-11-230-90-000
0.300	red	999-11-230-11-000	999-11-230-91-000
0.300	blue	999-11-230-12-000	999-11-230-92-000
0.300	not insulated	999-11-113-10-000	999-11-113-90-000
	Platings available	10μ" Au	200μ" Sn

SPECIALTY PRODUCTS
PLCC Sockets
For Through Board Mount

THROUGH BOARD MOUNT

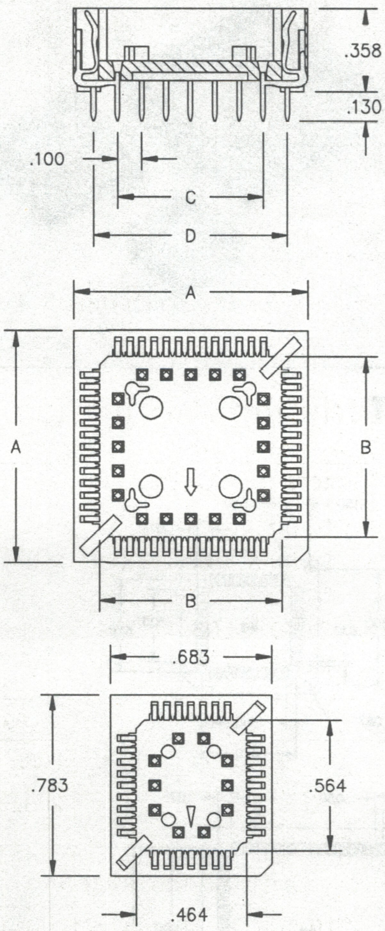
.358
.130
.100
C
D
A
A
B
B
.683
.783
.564
.464

- Series 540 PLCC sockets are designed to accept JEDEC type MO 047 leaded plastic substrates.
- Body has polarizing features for both substrate and socket insertion.
- Contacts of highly reliable design safely hold the substrate in place by positive spring action.
- PLCC chip extraction tool available. See page 4.

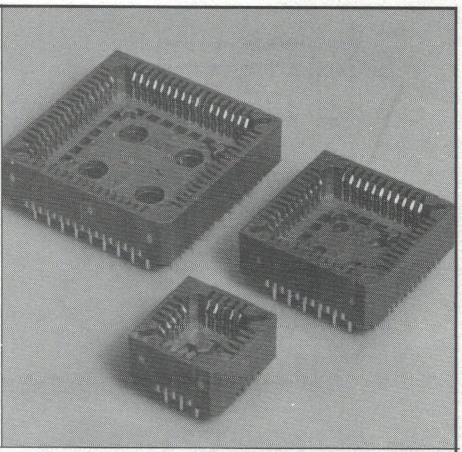

PRINTED CIRCUIT DRILLING PATTERNS
(TOP VIEW)

.030" dia. min. mounting holes

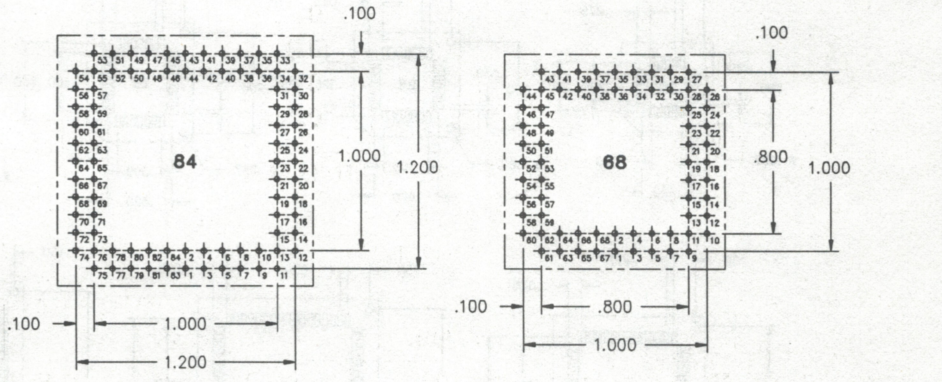
.100
84
1.000
1.200
.100
1.000
1.200
.100
68
.800
1.000
.100
.800
1.000

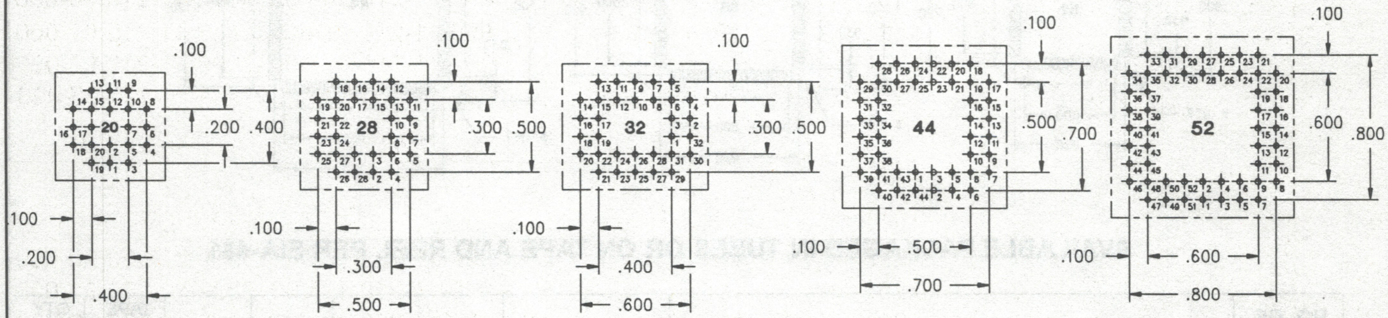
.100
20
.200
.400
.100
.200
.400
.100
28
.300
.500
.100
.300
.500
.100
32
.300
.500
.100
.400
.600
.100
44
.500
.700
.100
.500
.700
.100
52
.600
.800
.100
.600
.800

NO. OF PINS	ORDERING INFORMATION	A	B	C	D
20	540-99-020-24-000	.590	.360	.200	.400
28	540-99-028-24-000	.690	.460	.300	.500
32*	540-99-032-24-000	.783/.683	.564/.464	.400/.300	.600/.500
44	540-99-044-24-000	.890	.660	.500	.700
52	540-99-052-24-000	.990	.760	.600	.800
68	540-99-068-24-000	1.190	.960	.800	1.000
84	540-99-084-24-000	1.390	1.160	1.000	1.200
	* Rectangular				

ALL SERIES 540 CONTACTS ARE PLATED TIN-LEAD. SEE PAGE 4 FOR TECHNICAL SPECIFICATIONS.

SPECIALTY PRODUCTS
PLCC Sockets
For Surface Mount

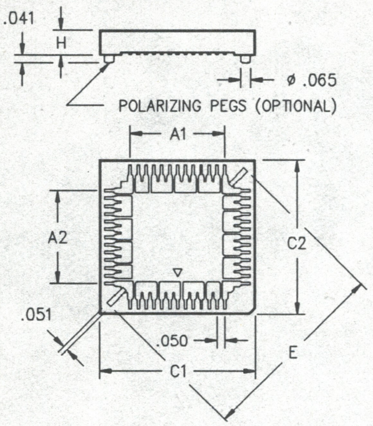
.041
H
ø .065
POLARIZING PEGS (OPTIONAL)
A1
A2
C2
.051
.050
E
C1

- Designed for JEDEC type devices.
- Open frame design in solder area improves results of IR soldering and facilitates visual inspection of solder pads.
- The brown PPS (Ryton R-4) insulator has optional polorizing pegs (PP).
- PLCC chip extraction tool available, see page 4.

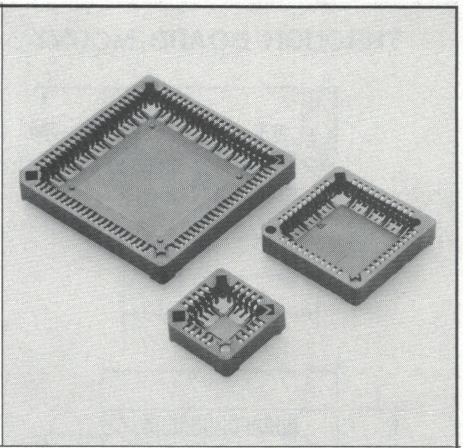

PCB LAYOUT FOR SURFACE MOUNT

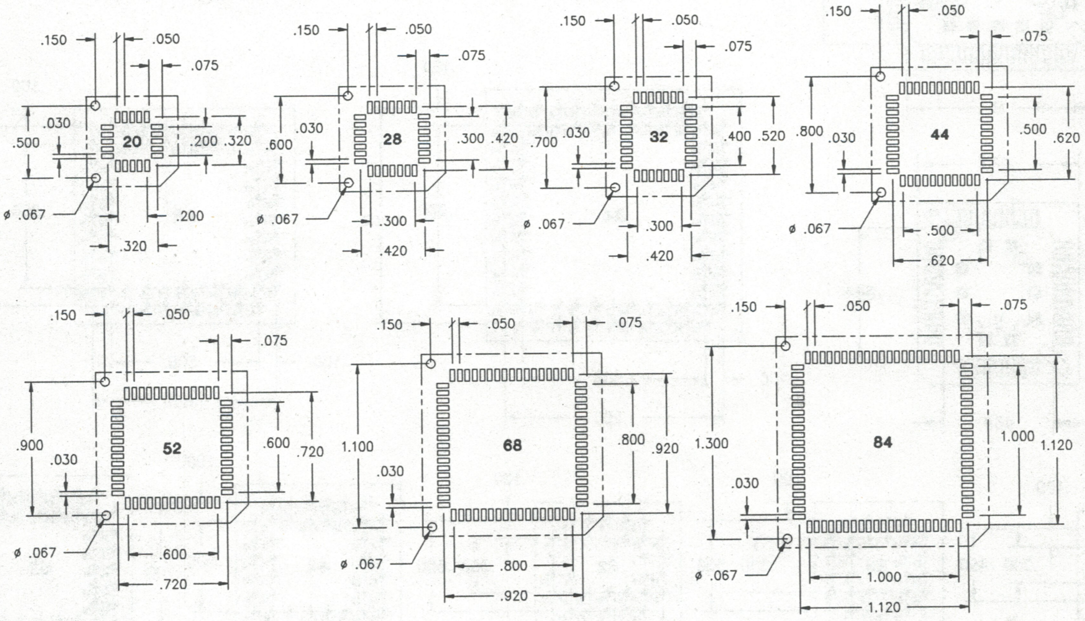
20
28
32
44
52
68
84
.150
.050
.075
.030
ø .067
.500
.200
.320
.600
.300
.420
.700
.400
.520
.800
.620
.900
.720
1.100
.920
1.300
1.000
1.120

AVAILABLE PACKAGED IN TUBES OR ON TAPE AND REEL PER EIA-481

NO. OF PINS	ORDERING INFORMATION		A1	A2	C1	C2	E	H	TAPE WIDTH mm	QTY PER REEL
20	540-99-020-17-400X0X		.200	.200	.585	.585	.657	.180	24	490
28	540-99-028-17-400X0X		.300	.300	.685	.685	.799	.180	32	400
32*	540-99-032-17-400X0X	*RECTANGULAR	.300	.400	.665	.766	.885	.168	32	400
44	540-99-044-17-400X0X		.500	.500	.885	.885	1.082	.180	44	250
52	540-99-052-17-400X0X		.600	.600	1.000	1.000	1.224	.180	44	250
68	540-99-068-17-400X0X		.800	.800	1.202	1.202	1.507	.180	44	250
84	540-99-084-17-400X0X		1.000	1.000	1.400	1.400	1.791	.180	56	250

X = 0 Without PP
X = 2 With PP

X = 0 Tube Packaging
X = 4 Tape and Reel

ALL SERIES 540 CONTACTS ARE PLATED TIN-LEAD. SEE PAGE 4 FOR TECHNICAL SPECIFICATIONS.

PIN GRID ARRAY SOCKETS
Technical Specifications

Pin grid array sockets are designed to accept high pin count IC's, they use low force 6-finger contacts to ease insertion/extraction of the device. Standard low force (M-M #32) contact is used for pin counts up to 150, ultra-low force (M-M #35) contact is recommended for 150 pins or more but less than 250 pins. The "ultra lite" (M-M #43) is recommended for 250 pins or more.

CONTACT DETAIL

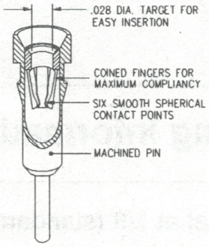
.028 DIA. TARGET FOR EASY INSERTION
COINED FINGERS FOR MAXIMUM COMPLIANCY
SIX SMOOTH SPHERICAL CONTACT POINTS
MACHINED PIN

PGA sockets all have precision machined pins, this offers the lowest possible profile. The closed bottom design also eliminates flux and solder contamination, and the pins are in-line with contact entry.

Insulator bodies are molded from high temp. PCT polyester suitable for all forms of soldering including wave, infra-red reflow and vapor phase.

Standard pin options are shown on pages 66-72 and 138 standard footprints may be selected from pages 74-78. Use the form on page 73 to specify new footprints and custom assemblies.

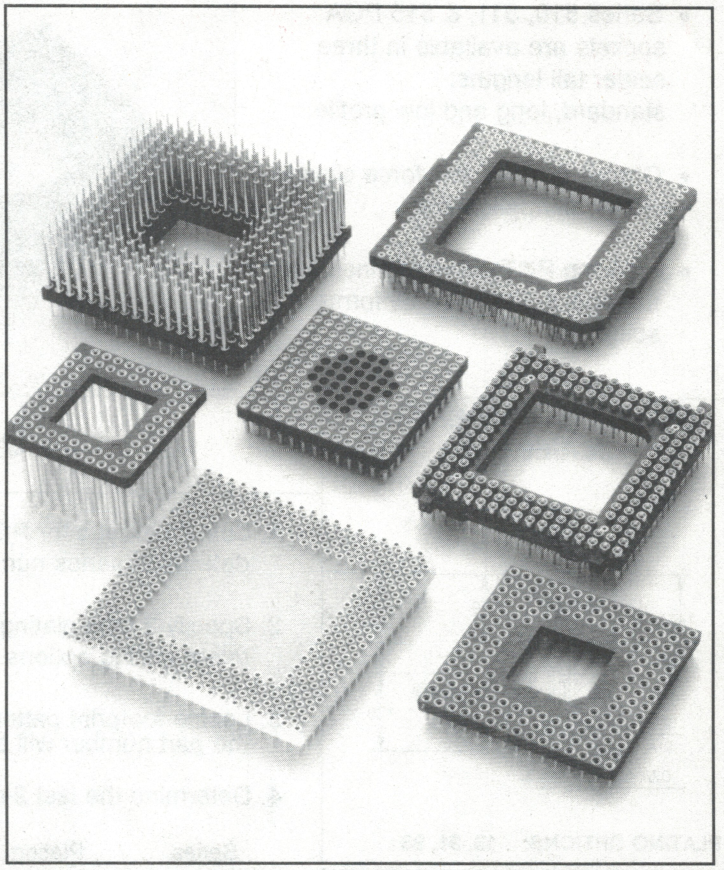

TECHNICAL SPECIFICATIONS

Materials

-Insulator body:

High Temp. glass-filled thermoplastic polyester (PCT)

Heat deflection temperature (HDT @ 264 PSI) = 254°C(490°F)

Self-extinguishing, rated UL94V-0

-Receptacle (Sleeve):

Screw machined brass (QQ-B-626), plated 10µ" gold or 200µ" tin-lead (SnPb 90/10) over 80-120µ" nickel.

-Pin:

Screw machined brass (QQ-B-626), plated 10µ" gold or 200µ" tin-lead (SnPb 90/10) over 80-120µ" nickel.

-Contact (clip):

Stamped beryllium-copper (QQ-C-533), plated 10µ" or 30µ" gold over 80-120µ" nickel.

Mechanical Data

-Insertion characteristics:

Measured with a polished steel gauge .018 diameter

Low force M-M#32 (01 suffix) typ. insertion force 50 grams
typ. extraction force 30 grams

Ultra-low force M-M#35 (02 suffix) typ. insertion force 25 grams
typ. extraction force 15 grams

"Ultra lite" M-M#43 (03 suffix) typ. insertion force 12.5 grams
typ. extraction force 7.5 grams

-Mechanical life: 100 cycles min.

Electrical & Environmental Data

-See general specifications on page 4.

DIMENSIONS OF PGA SOCKET INSULATORS

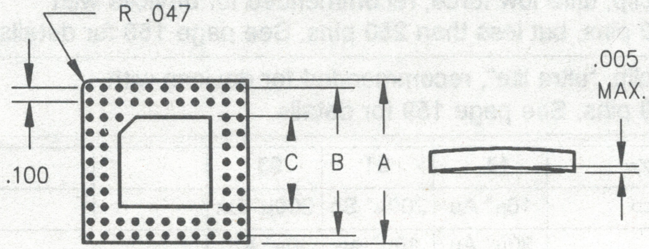

Dimensions **A**, **B** and **C** can be calculated as follows:

n1 = GRID SIZE (# of pins per side)

n2 = WINDOW SIZE

A = n1 X .100"

B = (n1−1) X .100"

C = (n2 X .100") − .016"

PIN GRID ARRAY SOCKETS Standard, Long Solder Tail & Low Profile

Series 510, 511, 515

- Series 510, 511, & 515 PGA sockets are available in three solder tail lengths: standard, long and low profile.
- Choice of three low force clips to cover all applications.
- Hi-Temp PCT polyester insulator material suitable for all forms of soldering.

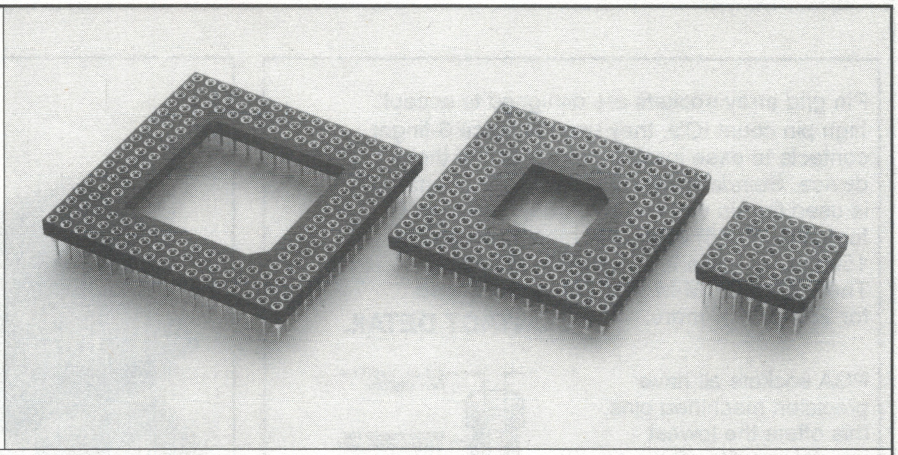

STANDARD SOLDER TAIL SERIES 510

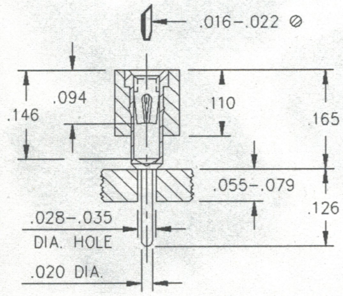

.016–.022 ⌀
.094
.146
.110
.165
.055–.079
.126
.028–.035
DIA. HOLE
.020 DIA.

PLATING OPTIONS: 13, 91, 93

LONG SOLDER TAIL SERIES 511

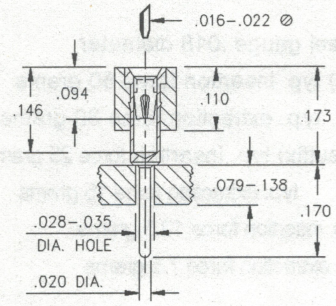

.016–.022 ⌀
.094
.146
.110
.173
.079–.138
.170
.028–.035
DIA. HOLE
.020 DIA.

PLATING OPTIONS: 13, 93

LOW PROFILE PIN SERIES 515

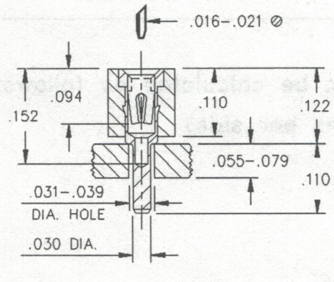

.016–.021 ⌀
.094
.152
.110
.122
.055–.079
.110
.031–.039
DIA. HOLE
.030 DIA.

PLATING OPTIONS: 13, 93

Ordering Information

1. Select pin type for PGA socket at left (standard, long or low profile) to determine series number.
2. Specify 2-digit plating code from chart at bottom of page (Note plating options available for each series under illustrations at left).
3. Locate footprint pattern from pages 74 to 78, the middle 8 digits of the part number will be located under the pattern.
4. Determine the last 2 digits of part number from the Contact Chart below.

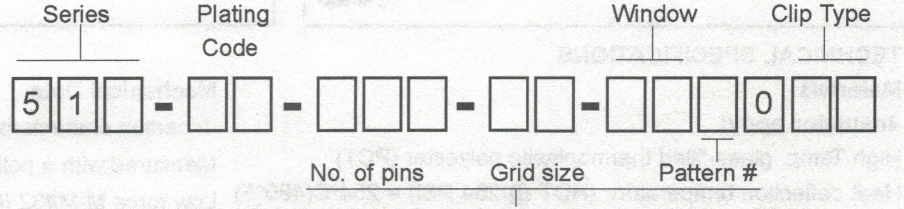

Series
Plating Code
Window
Clip Type
5 1 - □□ - □□□ - □□ - □□□□0□
No. of pins
Grid size
Pattern #

Determined from footprint pattern pages 74 to 78

EXAMPLE OF COMPLETE PART NUMBER:
510-93-068-11-061001

This is a 68 pin (11x11 grid) insulator with a .6" square window and fitted with standard solder tail socket pins. Pins are tin plated, inner contacts are Mill-Max #32 and are plated 30µ" gold.

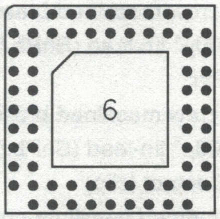

Clip Type	Contact (Clip) Chart
01	Mill-Max #32 clip, standard low force, recommended for devices with less than 150 pins. See page 158 for details.
02	Mill-Max #35 clip, ultra low force, recommended for devices with more than 150 pins, but less than 250 pins. See page 158 for details.
03	Mill-Max #43 clip, "ultra lite", recommended for devices with more than 250 pins. See page 159 for details.

SPECIFY PLATING CODE XX=	13	91	93
Sleeve (Pin)	10µ" Au	200µ" Sn	200µ" Sn
Contact (Clip)	30µ" Au	10µ" Au	30µ" Au

PIN GRID ARRAY SOCKETS
2 and 3 Level Wrapost

- Series 522 & 523 PGA sockets are available in 2 and 3 level wrapost lengths.
- Choice of three low force clips to cover all applications.
- Hi-Temp PCT polyester insulator material suitable for all forms of soldering.

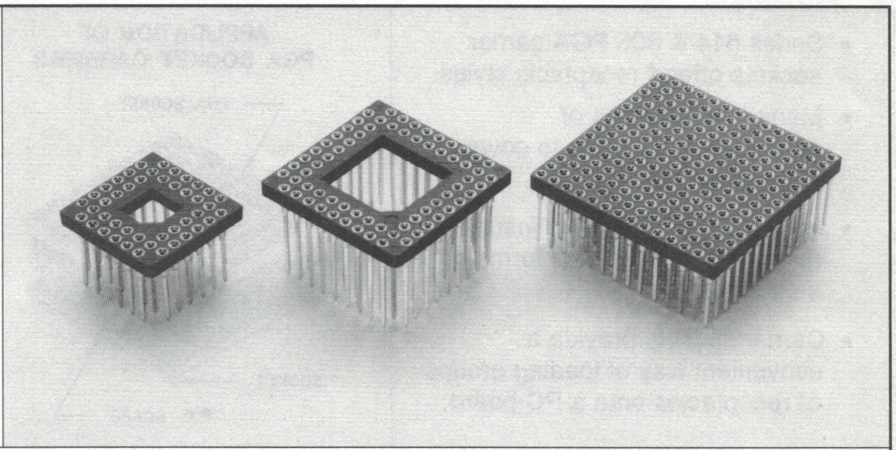

2 LEVEL WRAPOST
SERIES 522

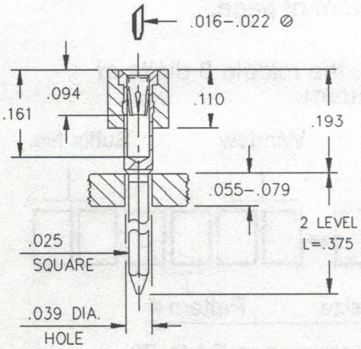
.016–.022 ⌀
.094
.161
.110
.193
.055–.079
2 LEVEL
L=.375
.025
SQUARE
.039 DIA.
HOLE

PLATING OPTIONS: 13, 93

3 LEVEL WRAPOST
SERIES 523

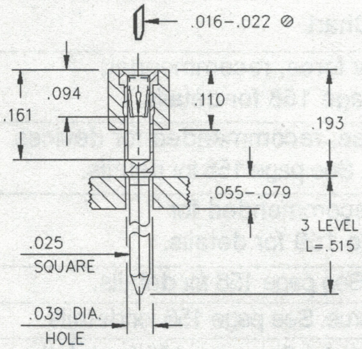
.016–.022 ⌀
.094
.161
.110
.193
.055–.079
3 LEVEL
L=.515
.025
SQUARE
.039 DIA.
HOLE

PLATING OPTIONS: 13, 93

Ordering Information

1. Select 2 or 3 Level Wrapost pin at left to determine series number.
2. Specify 2-digit plating code from chart at bottom of page.
3. Locate footprint pattern from pages 74 to 78, the middle 8 digits of the part number will be located under the pattern.
4. Determine the last 2 digits of part number from the Contact Chart below.

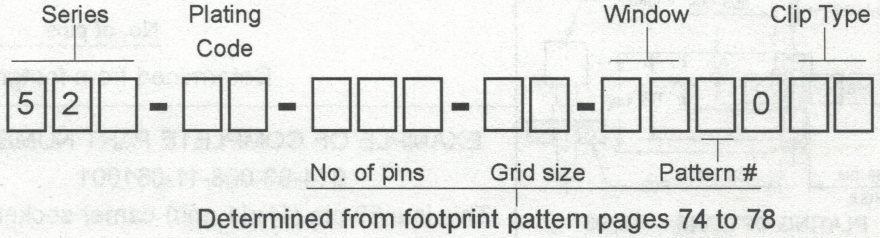
Series
Plating
Code
Window
Clip Type
5 2
0
No. of pins
Grid size
Pattern #
Determined from footprint pattern pages 74 to 78

EXAMPLE OF COMPLETE PART NUMBER:
523-13-068-11-061001

This is a 68 pin (11x11 grid) insulator with a .6" square window and fitted with 3 level wraposts. Pin sleeve is plated 10μ" gold, inner contacts are Mill-Max #32 and are plated 30μ" gold.

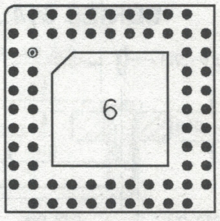

Clip Type	Contact (Clip) Chart
01	Mill-Max #32 clip, standard low force, recommended for devices with less than 150 pins. See page 158 for details.
02	Mill-Max #35 clip, ultra low force, recommended for devices with more than 150 pins, but less than 250 pins. See page 158 for details.
03	Mill-Max #43 clip, "ultra lite", recommended for devices with more than 250 pins. See page 159 for details.

SPECIFY PLATING CODE XX=	13	93
Sleeve (Pin)	10μ" Au	200μ" Sn
Contact (Clip)	30μ" Au	30μ" Au

PIN GRID ARRAY SOCKETS
Carrier Type

- Series 614 & 605 PGA carrier sockets offer 4 receptacle styles.
- Many combinations of receptacles and clips to cover all applications.
- Hi-Temp PCT polyester insulator material suitable for all forms of soldering.
- Carrier sockets provide a convenient way of loading groups of receptacles onto a PC board.

APPLICATION OF PGA SOCKET CARRIERS

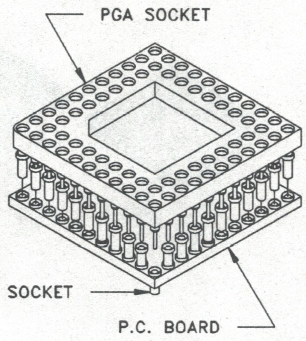
PGA SOCKET
SOCKET
P.C. BOARD

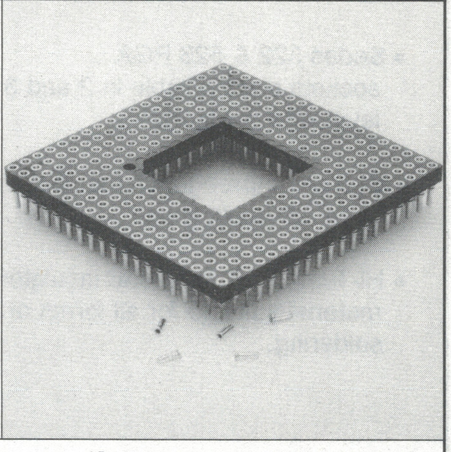

LOW PROFILE
SERIES 614...001, 002, 003

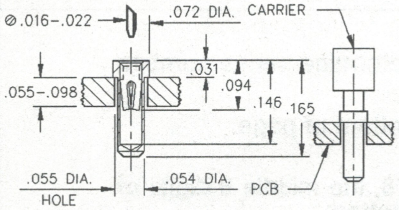
⌀.016-.022
.072 DIA.
CARRIER
.031
.094
.146
.165
.055-.098
.055 DIA.
HOLE
.054 DIA.
PCB

PLATING OPTIONS: 13, 93

MINIATURE
SERIES 614...007

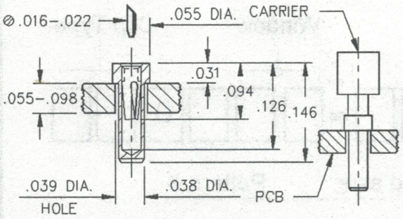
⌀.016-.022
.055 DIA.
CARRIER
.031
.094
.126
.146
.055-.098
.039 DIA.
HOLE
.038 DIA.
PCB

PLATING OPTIONS: 13, 93

LOWEST PROFILE
SERIES 614...012

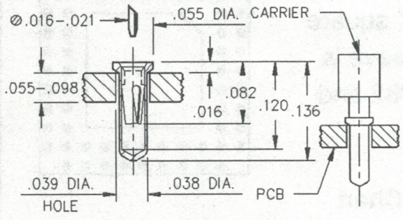
⌀.016-.021
.055 DIA.
CARRIER
.082
.016
.120
.136
.055-.098
.039 DIA.
HOLE
.038 DIA.
PCB

PLATING OPTIONS: 93

REDUCED BARREL
SERIES 605...048

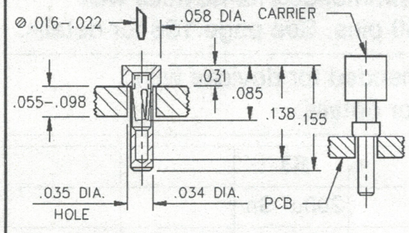
⌀.016-.022
.058 DIA.
CARRIER
.031
.085
.138
.155
.055-.098
.035 DIA.
HOLE
.034 DIA.
PCB

PLATING OPTIONS: 93

Ordering Information

1. Select receptacle type at left in combination with receptacle chart below to determine series prefix & suffix numbers.
2. Specify 2-digit plating code from chart at bottom of page.
3. Locate footprint pattern from pages 74 to 78, the middle 8 digits of the part number will be located under the pattern.

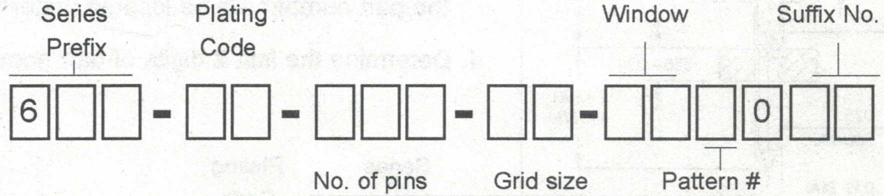
Series Prefix
Plating Code
Window
Suffix No.
6
0
No. of pins
Grid size
Pattern #

Determined from footprint pattern pages 74 to 78

EXAMPLE OF COMPLETE PART NUMBER:

614-93-068-11-061001

This is a 68 pin (11x11 grid) carrier socket with a .6" square window and fitted with low profile receptacles. Pins are tin plated, inner contacts are Mill-Max #32 and are plated 30µ" gold.

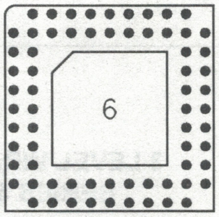

Suffix	Receptacle / Clip Chart
01	Low Profile Mill-Max #32 clip, standard low force, recommended for devices with less than 150 pins. See page 158 for details.
02	Low Profile Mill-Max #35 clip, ultra low force, recommended for devices with more than 150 pins, but less than 250 pins. See page 158 for details.
03	Low Profile Mill-Max #43 clip, "ultra lite", recommended for devices with more than 250 pins. See page 159 for details.
07	Miniature Mill-Max #21 clip, standard low force. See page 156 for details.
12	Lowest Profile Mill-Max #21 clip, standard low force. See page 156 for details.
48	Reduced Barrel Mill-Max #21 clip, standard low force. See page 156 for details.

SPECIFY PLATING CODE XX=	13	93
Sleeve (Pin)	10µ" Au	200µ" Sn
Contact (Clip)	30µ" Au	30µ" Au

PIN GRID ARRAY SOCKETS
Optional Tabs for Clip-on Heatsink**
Interstitial Pattern

- Series 518 Interstitial PGA sockets are available with and without tabs for clip-on heatsink.
- Mill-Max #43, "Ultra-Lite" contact standard, see page 159 for details.
- Hi-Temp PCT polyester insulator material suitable for all forms of soldering.

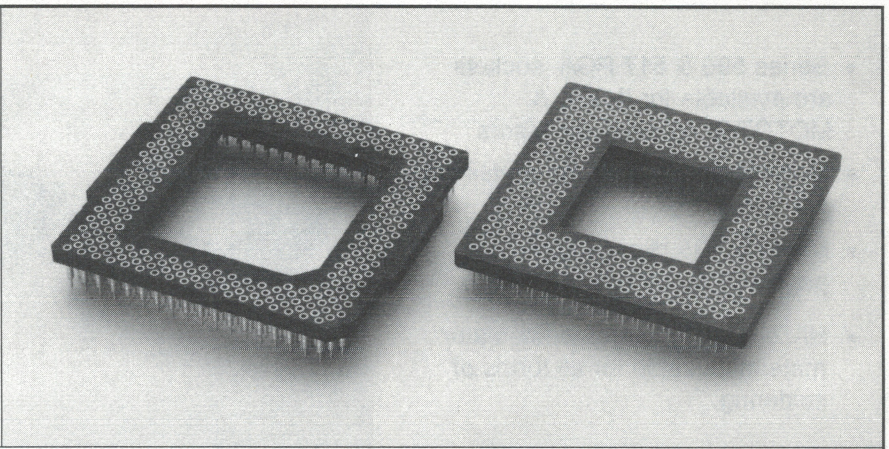

SOLDER TAIL SOCKET PIN (Without Heatsink Tabs)

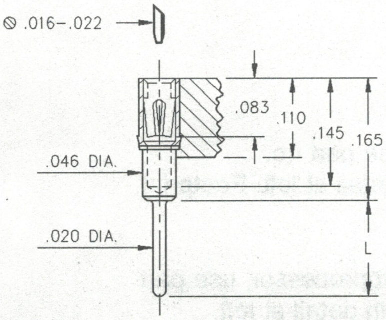

Pin Type	
02	For L = .125"
03	For L = .145"
08	For L = .100"

CAN ALSO USE PIN TYPES 04 AND 06 LISTED BELOW.

SOLDER TAIL SOCKET PIN (With Heatsink Tabs)

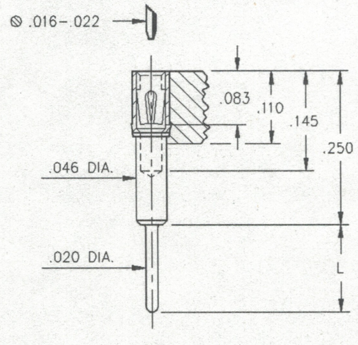

Pin Type	
04	For L = .080"
06	For L = .115"

PIN 08 IS USED EXCLUSIVELY IN CERTAIN PATTERNS. SEE CHART "A".

Ordering Information

Interstitial configurations are a .100" grid pattern overlapped with a second, staggered .100" grid pattern thus doubling the package density of the socket.

1. Locate interstitial footprint pattern from pages 77 or 78, the middle 8 digits of the part number will be located under the pattern.
2. Specify 2-digit plating code from chart at bottom of page.
3. Determine the last 2 digits of part number from the pin type at left. For sockets with heatsink tabs, see chart "**A**" below for pin options.

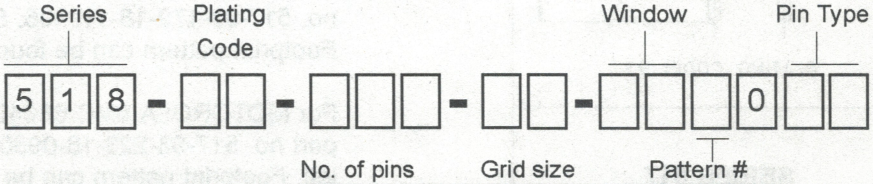

Determined from footprint pattern pages 77 to 78

CHART A

FOOTPRINT PATTERN	HEATSINK MFR	PIN TYPE
296-19-126	THERMALLOY	04, 06
296-19-127	THERMALLOY	04, 06
320-19-126	THERMALLOY	04, 06
296-19-128	WAKEFIELD	04, 06
296-69-129008	SEE NOTE**	08 ONLY
320-69-129008	SEE NOTE**	08 ONLY
387-01-016508	SEE NOTE**	08 ONLY

NOTE **
Designed to work with:
THERMALLOY
WAKEFIELD
AAVID
IERC
heat sinks & clips.

EXAMPLE OF COMPLETE PART NUMBER:
518-93-325-18-105003

This is a 325 pin interstitial (18x18 grid) insulator with 1.00" square window and fitted with standard solder tail socket pins. Pins are tin plated, inner contacts are Mill-Max #43 and are plated 30μ" gold.

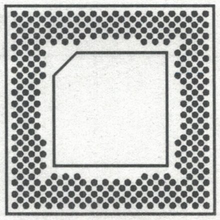

SPECIFY PLATING CODE XX=	13		93		
Sleeve (Pin)	10μ" Au		200μ" Sn		
Contact (Clip)	30μ" Au		30μ" Au		

PIN GRID ARRAY SOCKETS
With Tabs for Clip-on Heatsink**
Standard .100" Grid

- Series 590 & 517 PGA sockets are available for INTEL & MOTOROLA Microprocessors.
- Molded tabs hold down heatsink & clip assembly.
- Mill-Max #35 clip standard, see page 158 for details.
- Hi-Temp PCT polyester insulator material suitable for all forms of soldering.

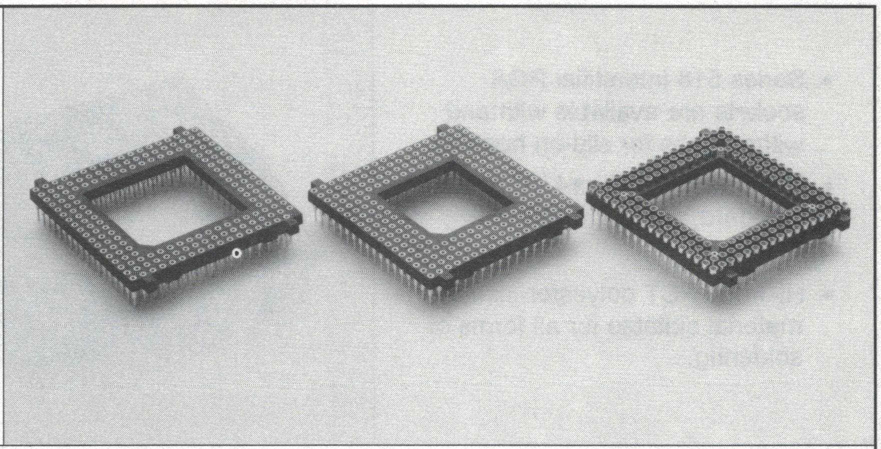

Ordering Information

SERIES 590

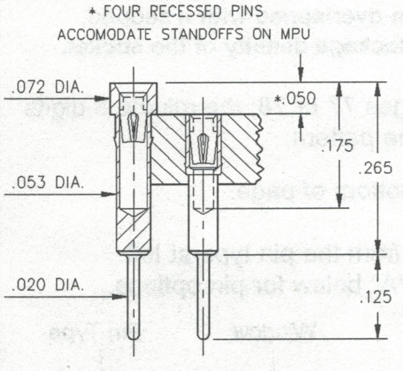
* FOUR RECESSED PINS
ACCOMODATE STANDOFFS ON MPU
.072 DIA.
*.050
.175
.265
.053 DIA.
.020 DIA.
.125

PLATING CODE: 93

SERIES 517

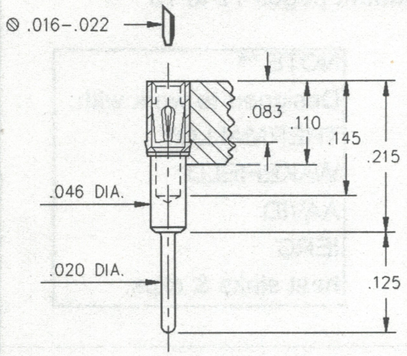
⊘ .016–.022
.083
.110
.145
.215
.046 DIA.
.020 DIA.
.125

PLATING CODE: 93

For INTEL 486 Microprocessor, use part no. 590-93-168-17-105096. See pin detail at left. Footprint pattern can be found on page 77.

For MOTOROLA #MC 68040 Microprocessor, use part no. 517-93-179-18-117006. See pin detail at left. Footprint pattern can be found on page 77.

For MOTOROLA #MC 68040 Microprocessor, use part no. 517-93-223-18-098006. See pin detail at left. Footprint pattern can be found on page 77.

** Designed to work with THERMALLOY and IERC Heat sinks and clips.

PLATING CODE		93	
Sleeve (Pin)	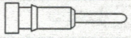	200µ" Sn	
Contact (Clip)		30µ" Au	

PIN GRID ARRAY HEADERS
Pin Header Interconnects
Solder Tail

Series 551

- Series 551 PGA Interconnect sockets are available in various lengths with .019" dia. pluggable solder tails at one end and .025" dia. pins at the other.*
- Hi-Temp PCT polyester insulator material suitable for all forms of soldering.

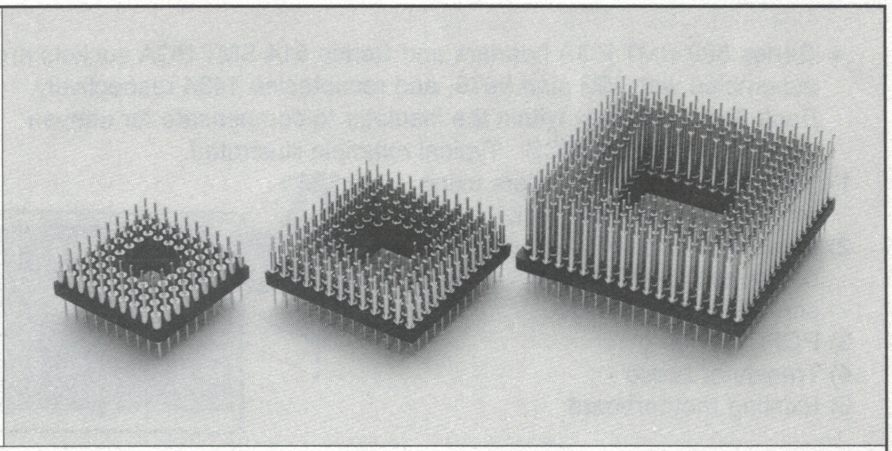

HEADER PIN TYPE 03

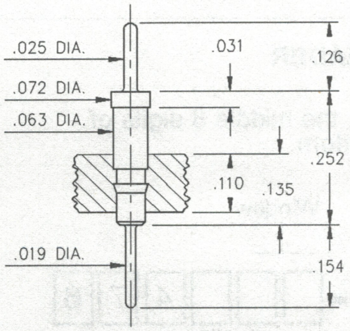
.025 DIA.
.031
.126
.072 DIA.
.063 DIA.
.252
.110
.135
.019 DIA.
.154

PLATING OPTIONS: 10, 90

HEADER PIN TYPE 04, 05

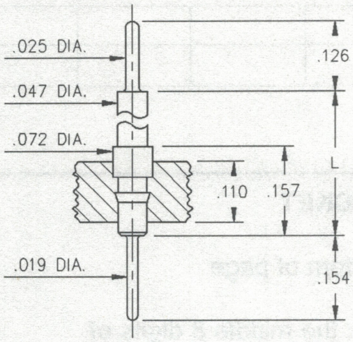
.025 DIA.
.126
.047 DIA.
.072 DIA.
L
.110
.157
.019 DIA.
.154

PLATING OPTIONS: 10, 90

Pin Type

04	For L = .331"
05	For L = .606"

Ordering Information

1. Select pin type for PGA header at left to determine 2-digit suffix designation, and enter under pin type.
2. Specify 2-digit plating code from chart at bottom of page.
3. Locate footprint pattern from pages 74 to 78, the middle 8 digits of the part number will be located under the pattern.

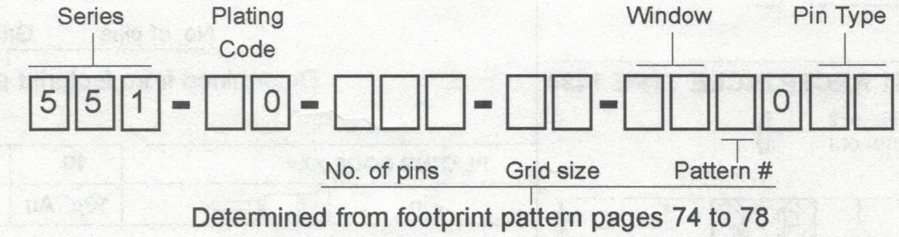
Series
Plating Code
Window
Pin Type
5 5 1 - □ 0 - □ □ □ - □ □ - □ □ □ □ 0 □
No. of pins
Grid size
Pattern #
Determined from footprint pattern pages 74 to 78

EXAMPLE OF COMPLETE PART NUMBER:

551-10-068-11-061004

This is a 68 pin (11x11 grid) insulator with .6" square window and fitted with 551...004 header pins. Pins are gold plated.

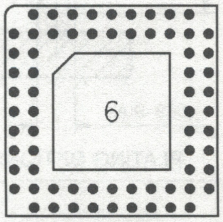

*Many other printed circuit pins are available for use in addition to those listed above. See pages 122 to 124. Consult Mill-Max Applications Engineers to develop a part number for your specific requirement.

SPECIFY PLATING CODE XX=		10	90		
Pin Plating		10µ" Au	200µ" Sn		

PIN GRID ARRAY SOCKETS
Surface Mount
Male Pin Header & Female Socket

Series 599, 514

- Series 599 SMT PGA headers and Series 514 SMT PGA sockets are assembled with MM pin# 9976, and receptacle# 1434 respectively. Each floats vertically within the insulator to compensate for uneven solder paste on the PCB. Typical example illustrated.

1) "Floating" pin SMT Headers using machined epoxy insulator.
2) Detail of "Floating" pins which compensate for unevenly screened solder paste.
3) PQFP device
4) Translator board
5) Existing motherboard

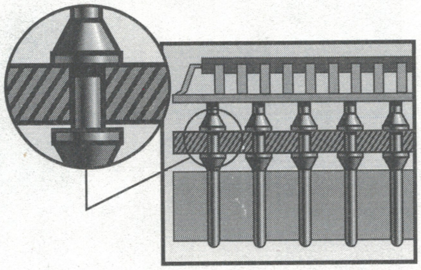

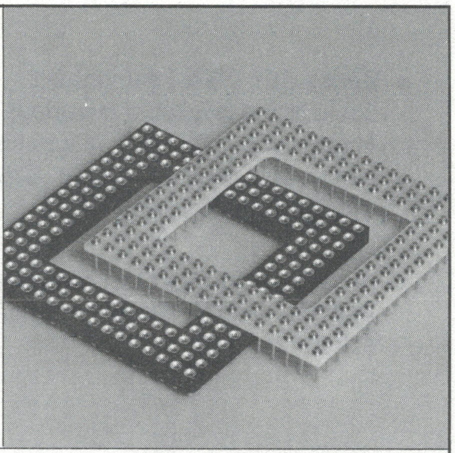

HEADER PIN TYPE 9976

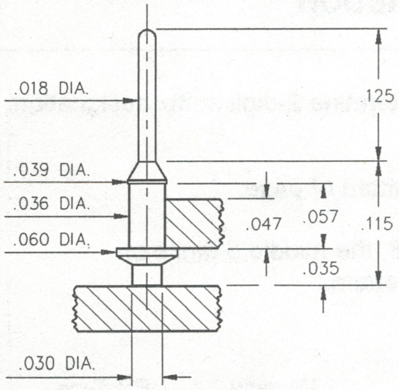

SMT RECEPTACLE TYPE 1434

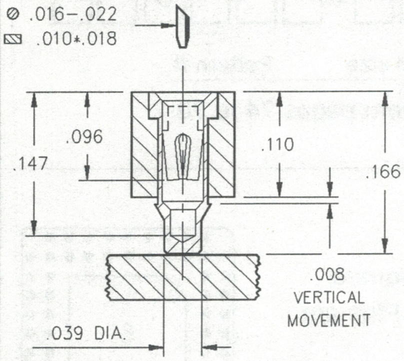

PLATING OPTIONS: 91, 93

Ordering Information

FOR PGA MALE PIN HEADER

1. Locate footprint pattern from pages 74 to 78, the middle 8 digits of the part number will be located under the pattern.

Series — Plating Code — Window

599-10-☐☐☐-☐☐-☐☐☐476

No. of pins — Grid size — Pattern #

Determined from footprint pattern pages 74 to 78

PLATING CODE XX=		10				
Pin	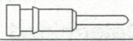	10μ" Au				

FOR PGA FEMALE SOCKET

1. Specify 2-digit plating code from chart at bottom of page
2. Locate footprint pattern from pages 74 to 78, the middle 8 digits of the part number will be located under the pattern.

Series — Plating Code — Window

514-☐☐-☐☐☐-☐☐-☐☐☐034

No. of pins — Grid size — Pattern #

Determined from footprint pattern pages 74 to 78

SPECIFY PLATING CODE XX=			91	93		
Sleeve (Pin)	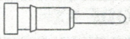		200μ" Sn	200μ" Sn		
Contact (Clip)			10μ" Au	30μ" Au		

CUSTOM PGA SOCKET WORKSHEET

PHOTOCOPY THIS PAGE AND FAX OR MAIL TO MILL-MAX FOR A PROMPT QUOTATION

FROM:

NAME:____________________________________ **TITLE:**____________________

COMPANY:____ **DATE:**____________

ADDRESS:____ **PHONE#:**____________

____ **FAX#:**____________

QUANTITIES TO QUOTE:
____

SEMICONDUCTOR DEVICE USED
____

FOR NEW FOOTPRINTS AND ALTERNATE PIN/SOCKET ASSEMBLIES, FILL IN THE PIN POSITIONS OF THE APPROPRIATE GRID TEMPLATE AND COMPLETE THE SPECIFICATION INFORMATION TO THE RIGHT.

EXAMPLE:

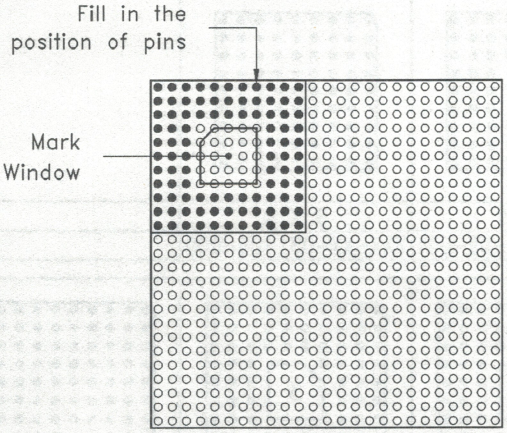

Fill in the position of pins
Mark Window

PGA SPECIFICATIONS

1. TYPE OF PGA ☐ A) STANDARD B) CARRIER
2. TYPE OF PIN ☐ REFER TO PAGES 66 TO 72
3. PLATING REFER TO PAGES 66 TO 72 FOR PLATING OPTIONS
   - ☐ SLEEVE
   - ☐ CONTACT
4. NUMBER OF PINS ☐
5. GRID SIZE ☐ (# OF PINS PER SIDE)
6. IS WINDOW REQUIRED?

YES______ NO______

INTERSTITIAL FOOTPRINT

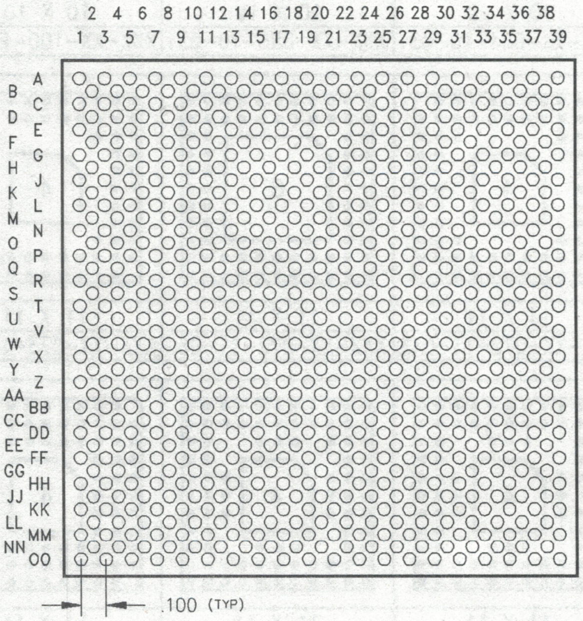

2 4 6 8 10 12 14 16 18 20 22 24 26 28 30 32 34 36 38
1 3 5 7 9 11 13 15 17 19 21 23 25 27 29 31 33 35 37 39
A C E G J L N P R T V X Z BB DD FF HH KK MM OO
B D F H K M O Q S U W Y AA CC EE GG JJ LL NN
.100 (TYP)

.100" GRID FOOTPRINT

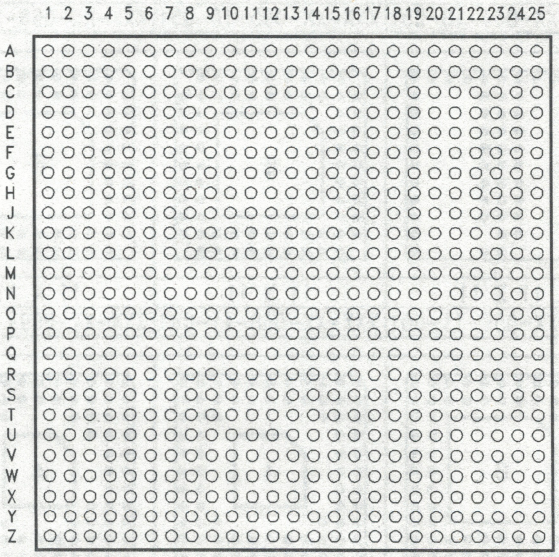

1 2 3 4 5 6 7 8 9 10 11 12 13 14 15 16 17 18 19 20 21 22 23 24 25
A B C D E F G H J K L M N O P Q R S T U V W X Y Z

IF YOU NEED ASSISTANCE, PLEASE CALL MILL-MAX AND ASK FOR AN APPLICATIONS ENGINEER

PIN GRID ARRAY SOCKET FOOTPRINTS

Top view shown, many other standard and custom footprints available.
Call Mill-Max for details.

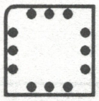	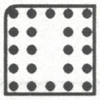	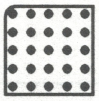		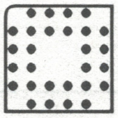	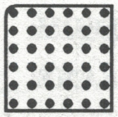
5 X 5	5 X 5	5 X 5		6 X 6	6 X 6
XXX-XX-012-05-001	XXX-XX-022-05-001	XXX-XX-025-05-000		XXX-XX-028-06-005	XXX-XX-036-06-000
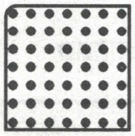		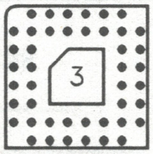	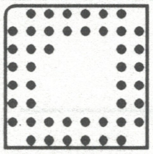	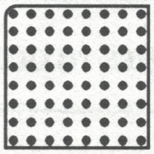	TOP VIEW
7 X 7		8 X 8	8 X 8	8 X 8	
XXX-XX-049-07-000		XXX-XX-044-08-031	XXX-XX-045-08-005	XXX-XX-064-08-000	
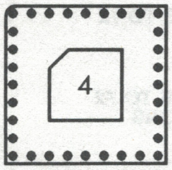	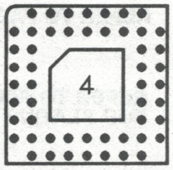	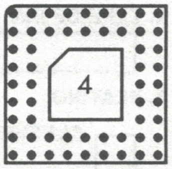	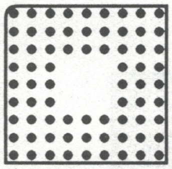	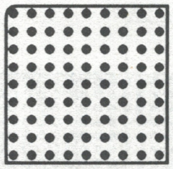	
9 X 9	9 X 9	9 X 9	9 X 9	9 X 9	
XXX-XX-032-09-041	XXX-XX-052-09-045	XXX-XX-056-09-041	XXX-XX-072-09-001	XXX-XX-081-09-000	
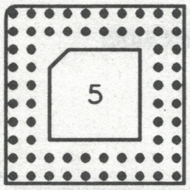	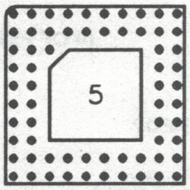	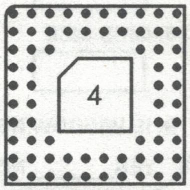	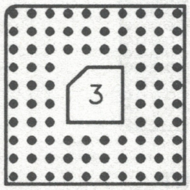	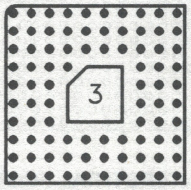	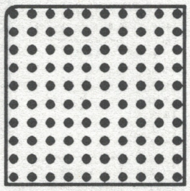
10 X 10	10 X 10	10 X 10	10 X 10	10 X 10	10 X 10
XXX-XX-064-10-051	XXX-XX-065-10-051	XXX-XX-068-10-041	XXX-XX-084-10-031	XXX-XX-085-10-031	XXX-XX-100-10-000
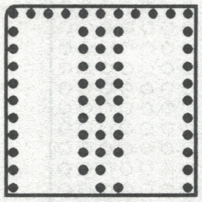	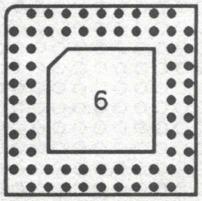	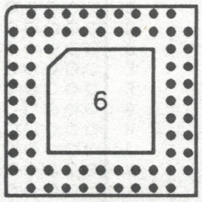	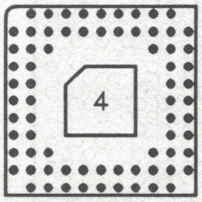	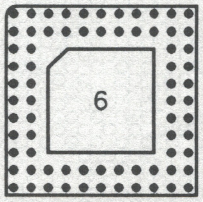	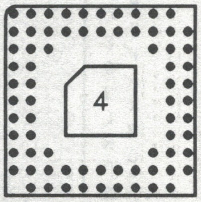
11 X 11	11 X 11	11 X 11	11 X 11	11 X 11	11 X 11
XXX-XX-059-11-001	XXX-XX-068-11-061	XXX-XX-069-11-061	XXX-XX-072-11-042	XXX-XX-072-11-061	XXX-XX-073-11-042
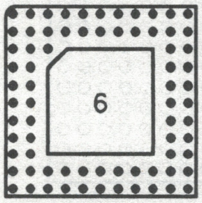	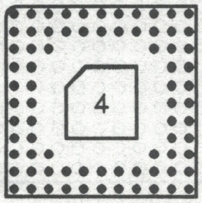	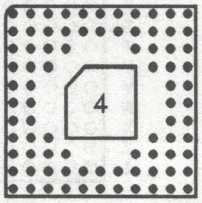	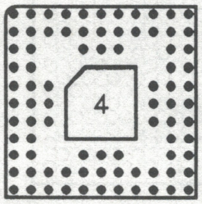	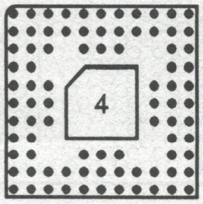	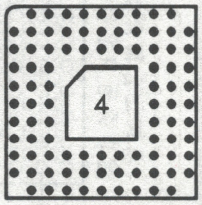
11 X 11	11 X 11	11 X 11	11 X 11	11 X 11	11 X 11
XXX-XX-073-11-061	XXX-XX-076-11-041	XXX-XX-084-11-041	XXX-XX-084-11-045	XXX-XX-085-11-041	XXX-XX-092-11-041

PIN GRID ARRAY SOCKET FOOTPRINTS

Top view shown, many other standard and custom footprints available.
Call Mill-Max for details.

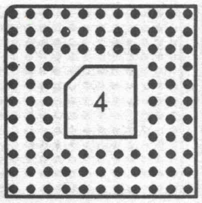	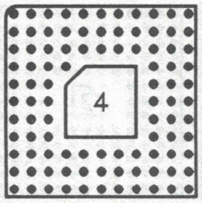	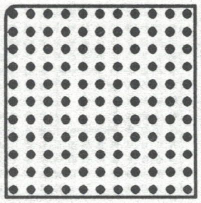			
11 X 11	11 X 11	11 X 11			
XXX-XX-096-11-041	XXX-XX-097-11-041	XXX-XX-121-11-000			

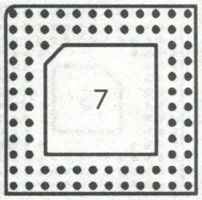	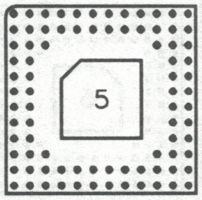	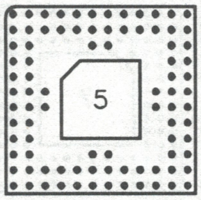	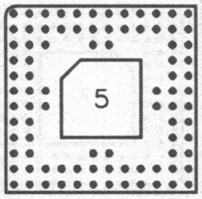	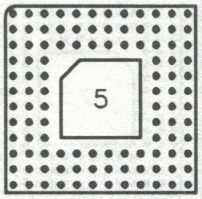	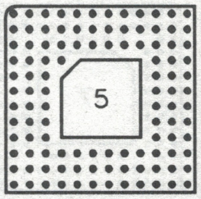
12 X 12	12 X 12	12 X 12	12 X 12	12 X 12	12 X 12
XXX-XX-081-12-071	XXX-XX-084-12-051	XXX-XX-088-12-052	XXX-XX-089-12-051	XXX-XX-108-12-051	XXX-XX-109-12-051

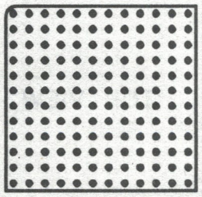					TOP VIEW
12 X 12					
XXX-XX-144-12-000					

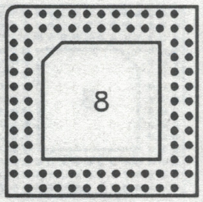	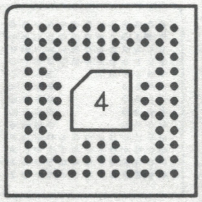	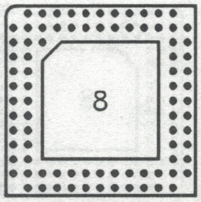	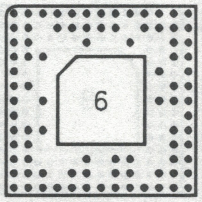	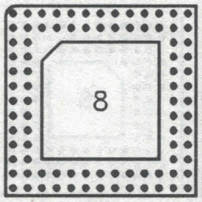	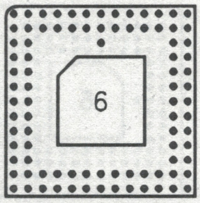
13 X 13	13 X 13	13 X 13	13 X 13	13 X 13	13 X 13
XXX-XX-084-13-081	XXX-XX-085-13-042	XXX-XX-085-13-081	XXX-XX-088-13-062	XXX-XX-088-13-081	XXX-XX-089-13-061

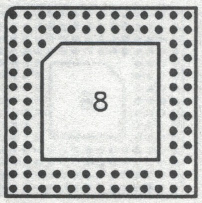	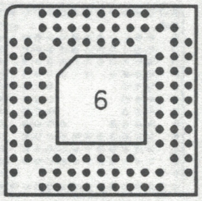	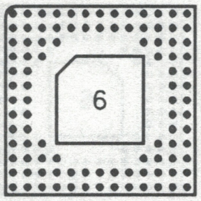	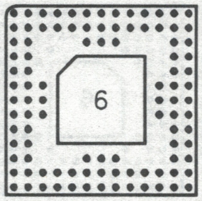	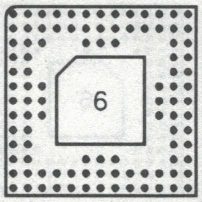	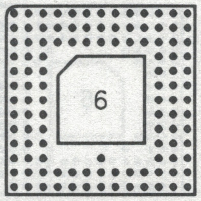
13 X 13	13 X 13	13 X 13	13 X 13	13 X 13	13 X 13
XXX-XX-089-13-082	XXX-XX-098-13-061	XXX-XX-100-13-061	XXX-XX-100-13-062	XXX-XX-101-13-061	XXX-XX-114-13-061

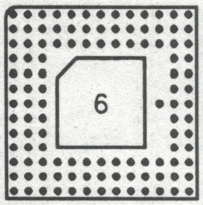	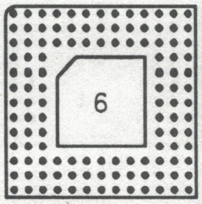	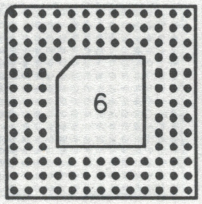	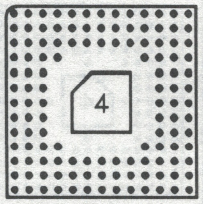	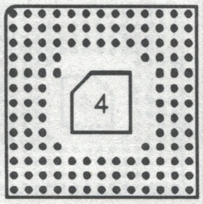	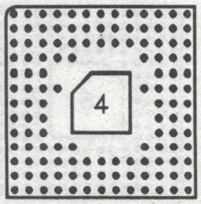
13 X 13	13 X 13	13 X 13	13 X 13	13 X 13	13 X 13
XXX-XX-114-13-062	XXX-XX-120-13-061	XXX-XX-121-13-061	XXX-XX-124-13-041	XXX-XX-125-13-041	XXX-XX-128-13-041

PIN GRID ARRAY SOCKET FOOTPRINTS

Top view shown, many other standard and custom footprints available.
Call Mill-Max for details.

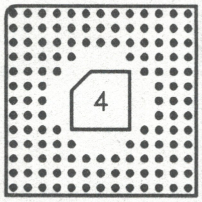

13 X 13
XXX-XX-132-13-041

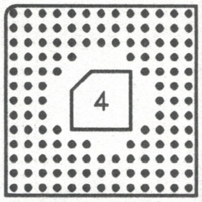

13 X 13
XXX-XX-133-13-045

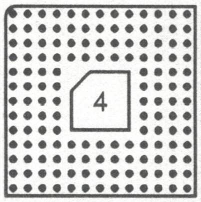

13 X 13
XXX-XX-144-13-041

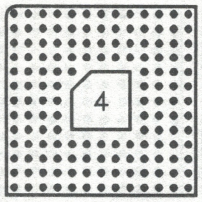

13 X 13
XXX-XX-145-13-041

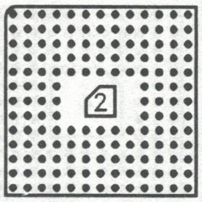

13 X 13
XXX-XX-154-13-021

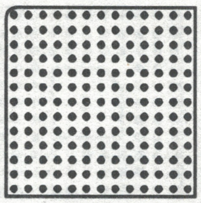

13 X 13
XXX-XX-169-13-000

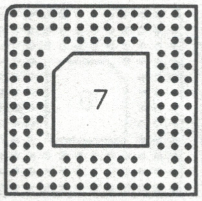

14 X 14
XXX-XX-124-14-071

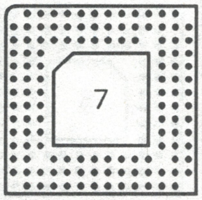

14 X 14
XXX-XX-125-14-071

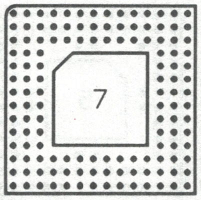

14 X 14
XXX-XX-132-14-071

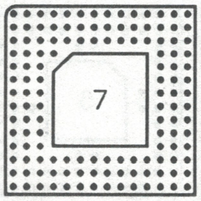

14 X 14
XXX-XX-133-14-071

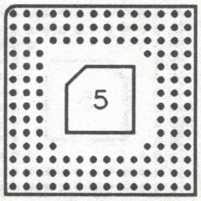

14 X 14
XXX-XX-135-14-051

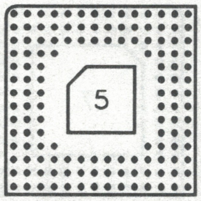

14 X 14
XXX-XX-136-14-051

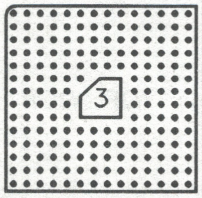

14 X 14
XXX-XX-181-14-031

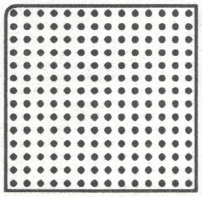

14 X 14
XXX-XX-196-14-000

TOP VIEW

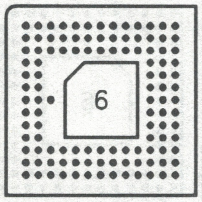

15 X 15
XXX-XX-114-15-063

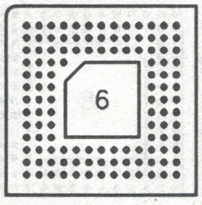

15 X 15
XXX-XX-121-15-061

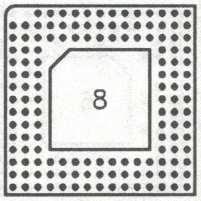

15 X 15
XXX-XX-142-15-085

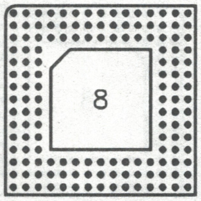

15 X 15
XXX-XX-144-15-082

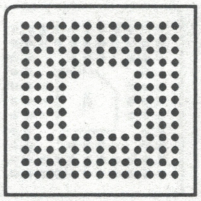

15 X 15
XXX-XX-145-15-002

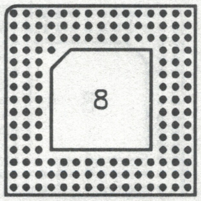

15 X 15
XXX-XX-145-15-081

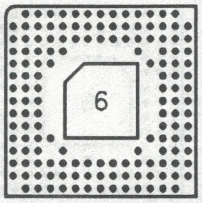

15 X 15
XXX-XX-149-15-061

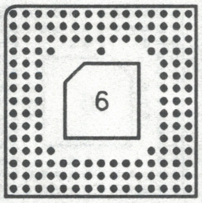

15 X 15
XXX-XX-149-15-063

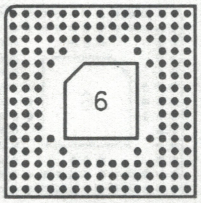

15 X 15
XXX-XX-153-15-061

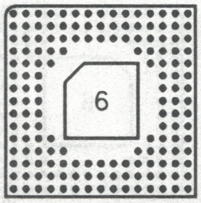

15 X 15
XXX-XX-156-15-061

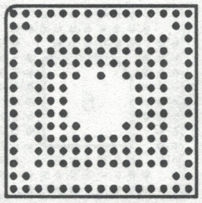

15 X 15
XXX-XX-161-15-005

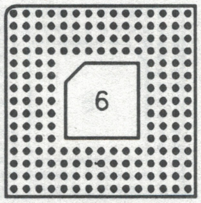

15 X 15
XXX-XX-176-15-061

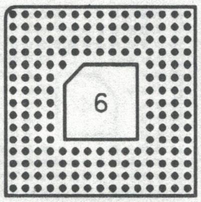

15 X 15
XXX-XX-177-15-061

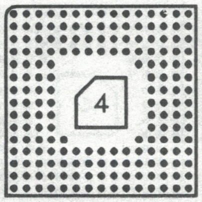

15 X 15
XXX-XX-179-15-041

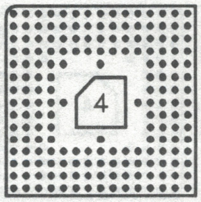

15 X 15
XXX-XX-181-15-041

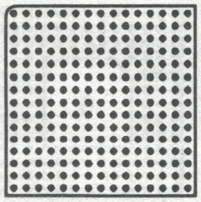

15 X 15
XXX-XX-225-15-000

PIN GRID ARRAY SOCKET FOOTPRINTS

Top view shown, many other standard and custom footprints available.
Call Mill-Max for details.

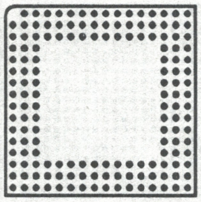
16 X 16
XXX-XX-155-16-003

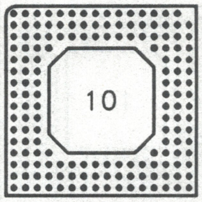

16 X 16
XXX-XX-159-16-105

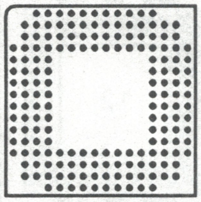
16 X 16
XXX-XX-173-16-005

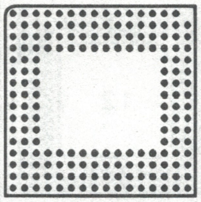
16 X 16
XXX-XX-175-16-005

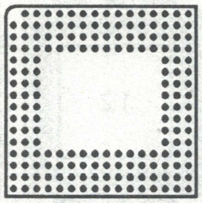
16 X 16
XXX-XX-175-16-006

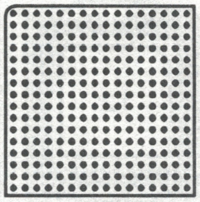
16 X 16
XXX-XX-256-16-000

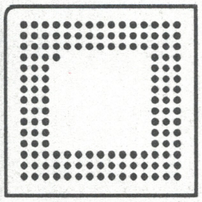
17 X 17
XXX-XX-145-17-001

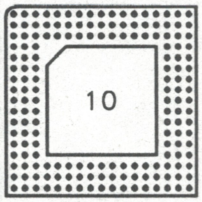

17 X 17
XXX-XX-168-17-101

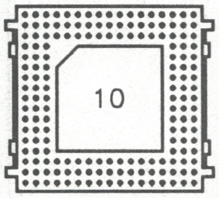

17 X 17
XXX-XX-168-17-105

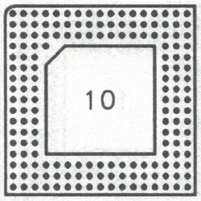

17 X 17
XXX-XX-169-17-101

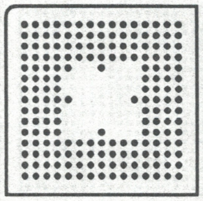
17 X 17
XXX-XX-181-17-001

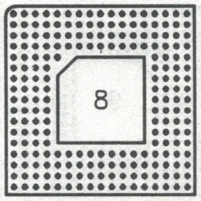

17 X 17
XXX-XX-209-17-081

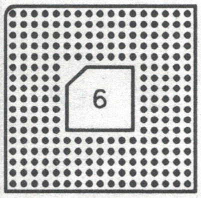

17 X 17
XXX-XX-240-17-061

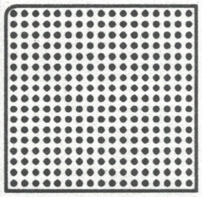
17 X 17
XXX-XX-289-17-000

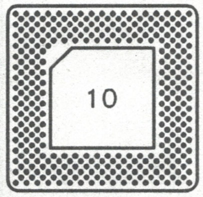

17 X 17
XXX-XX-325-17-105

TOP VIEW

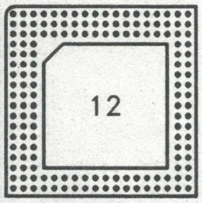

18 X 18
XXX-XX-155-18-121

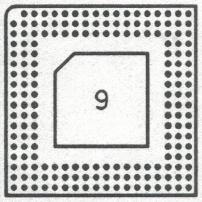

18 X 18
XXX-XX-179-18-095

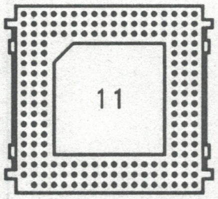

18 X 18
XXX-XX-179-18-117

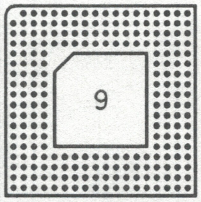

18 X 18
XXX-XX-223-18-095

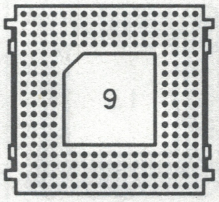

18 X 18
XXX-XX-223-18-098

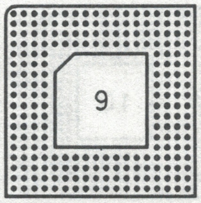

18 X 18
XXX-XX-224-18-095

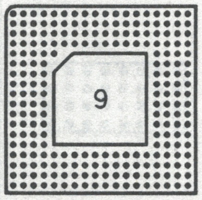

18 X 18
XXX-XX-225-18-091

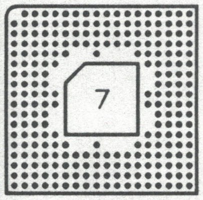

18 X 18
XXX-XX-241-18-075

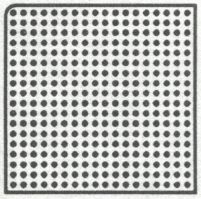
18 X 18
XXX-XX-324-18-000

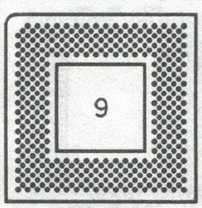

18 X 18
XXX-XX-391-18-096

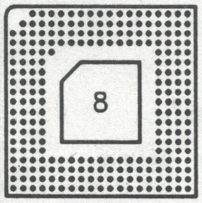

19 X 19
XXX-XX-238-19-086

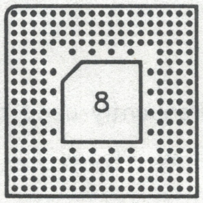

19 X 19
XXX-XX-256-19-081

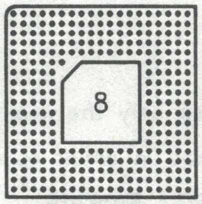

19 X 19
XXX-XX-281-19-081

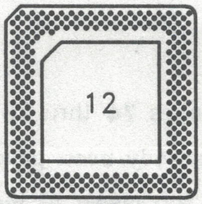

19 X 19
XXX-XX-296-19-125

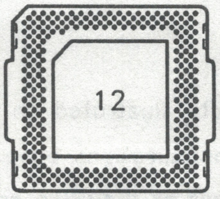

19 X 19
XXX-XX-296-19-126

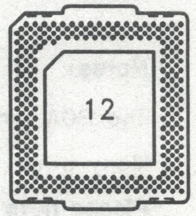

19 X 19
XXX-XX-296-19-127

PIN GRID ARRAY SOCKET FOOTPRINTS

Top view shown, many other standard and custom footprints available.
Call Mill-Max for details.

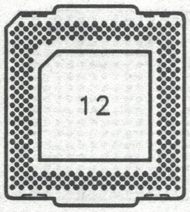

19 X 19
XXX-XX-296-19-128

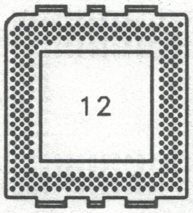

19 X 19
XXX-XX-296-69-129

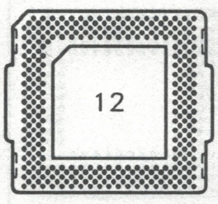

19 X 19
XXX-XX-320-19-126

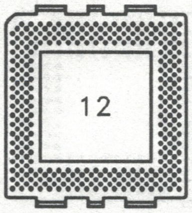

19 X 19
XXX-XX-320-69-129

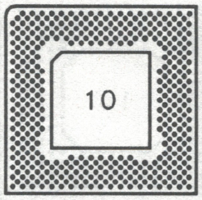

19 X 19
XXX-XX-403-19-105

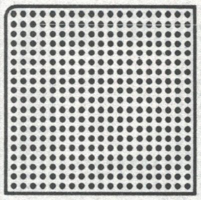

19 X 19
XXX-XX-361-19-000

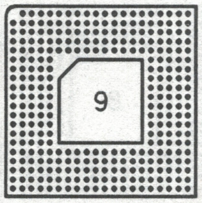

20 X 20
XXX-XX-299-20-096

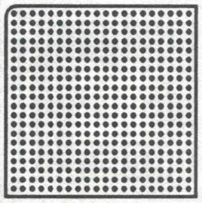

20 X 20
XXX-XX-400-20-000

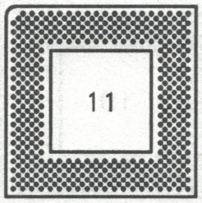

20 X 20
XXX-XX-447-20-115

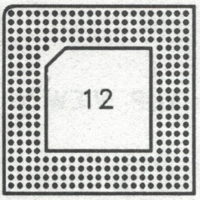

21 X 21
XXX-XX-273-21-125

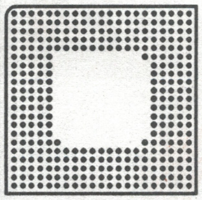

21 X 21
XXX-XX-323-21-005

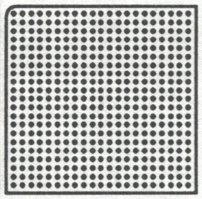

21 X 21
XXX-XX-441-21-000

TOP VIEW

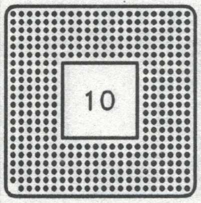

22 X 22
XXX-XX-383-22-105

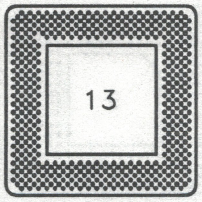

22 X 22
XXX-XX-499-22-136

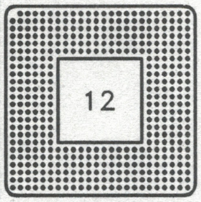

24 X 24
XXX-XX-431-24-125

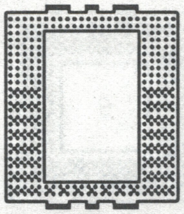

24 X 26
XXX-XX-387-01-016

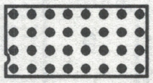

4 X 8
XXX-XX-032-01-503

Notes:

The PGA pinouts illustrated on pages **74** thru **78** are only the most frequently used ones.

Many other configurations have already been produced in small quantities. Please ask for details.

Please note that all drawings are top views of the PGA Sockets.

INTERCONNECT COMPONENTS

SPECIFICATION/ CUSTOM CAPABILITIES PAGE 81

PIN RECEPTACLES PAGES 82 - 114

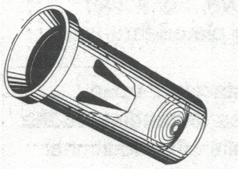

Pin receptacles are individual component lead sockets primarily used for the plugging and unplugging of components on pc boards. Pin receptacles are made by press-fitting a pre-tooled “multi-finger” contact into a precision machined shell. These receptacles will accept round pins ranging in diameter from .012” to .102” as well as square & rectangular component leads.

WRAPOST RECEPTACLES PAGES 115 - 118

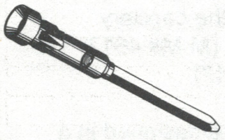

Wrapost receptacles are individual component lead sockets with .025” or .045” square pin termination for wire wrapped interconnection. Wrapost receptacles will accept round pins ranging in diameter from .015” to .047” as well as square & rectangular component leads.

PRINTED CIRCUIT PINS PAGES 119 - 131

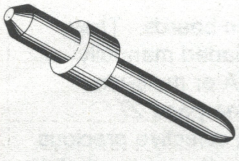

Printed circuit pins are machined, individual pins are used for various plug-in applications and board to board interconnection. They are commonly fastened to pc boards by being press-fit, swaged or soldered.

WRAPOST TERMINALS PAGES 132 - 135

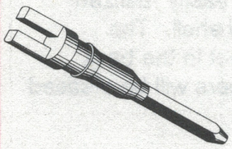

Wrapost terminals are individual pins .025” or .045” square termination for wire wrapped interconnection. They are commonly fastened to pc boards by being press-fit, swaged or soldered.

SOLDER TERMINALS PAGES 136 - 152

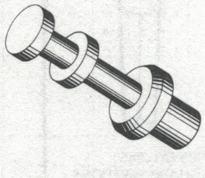

Solder terminals are machined terminals used primarily for attaching wires to circuit boards. Turret, slotted and pin types are available. They are commonly swaged (riveted) and soldered to pc boards.

GENERAL CONTACT INFORMATION / DATA PAGES 153 - 164

CUSTOM PIN / RECEPTACLE WORKSHEET PAGE 165

INDEX PAGES 166 - 168

THE BASIC RECEPTACLE

The basic conducting element used in printed circuit board (PCB) connections is the pin receptacle. This receptacle provides the electrical path from the component lead through the contact to the PCB via the terminal or housing. The machined shell or housing of pin receptacles is available in various styles depending on the application (See illustrations below). For solder mounting, a smooth barrel is utilized since it promotes capillary action of solder between the barrel and the plated-thru-hole. Here, the benefit of utilizing machined pins can be realized since the closed bottom design prevents flux contamination of the contact area. If the insertion pin is unusually long or the requirement calls for board stacking, open bottom receptacles are available. For press-fit usage, pin receptacles have been developed in various styles depending on the application. A barb feature is available for retention in molded plastic or drilled circuit boards. Knurled shells offer additional protection against rotation. For press-fit applications in plated-thru-holes, shells with flats on the side were developed.

The terminal end of pin receptacles have many variations; a round solder tail, press-fit tail, surface mount tail, crimp tail, solder-cup tail, swage tail or no tail. Special pin terminations have been developed over recent years to address both surface mount and solderless press-fit applications. For surface mounting, a “floating contact” design (M-M# 1434) was developed. This unique, stub tail design allows .008” vertical travel in the insulator as the contact reacts to the capillary action of the melting solder paste thus eliminating dry solder joints. (See page 21). Solderless press-fit tails (M-M# 4612, 4613, 4614 & 4615) are available in a truly compliant pin for use in plated-thru-hole applications (See page 17)

The inner contacts (clips) are made from precision stamped beryllium copper which is heat treated. They are designed in a multi-tine (or “multi-finger”) style enabling them to accommodate round, square and rectangular component leads. Mill-Max offers 29 pre-tooled contact types in 3, 4 or 6 “fingers”, that will accept diameters ranging from .012 inches to .102 inches, encompassing most design applications. A convenient contact selector chart is located on page 153 showing the different specifications of each contact.

Pin receptacles can be utilized as discrete connectors for the plugging and unplugging of components on pc boards. They can be utilized individually or in random arrays where the usage is small. Here they can be handled and loaded manually in preparation for soldering or, with different style of shell, for press-fitting. When it involves a SIP, DIP, PGA or multi-pin custom pattern, the growing trend with printed circuit board packaging is toward utilizing socket carriers. See page 27 for socket carrier information. The two-piece construction of pin and receptacle offers the benefit of utilizing selective precious metal plating. For example, in many applications, gold is usually plated on the smaller contact area allowing the larger shell to be plated in less expensive tin.

Mill-Max’s specialization in high-speed turning technology allows custom shells to be machined in a fraction of the time required by processes using swaging or stamping dies and at considerably less cost. A custom interconnect can be easily realized by selecting one of the 29 types of pre-tooled contacts (clips) and having it press-fit into a custom machined shell. The quickest way to obtain a quotation on custom made products is to fill out the custom pin/receptacle worksheet in the back of the Mill-Max catalog and fax it to the factory. If you need assistance, one of Mill-Max’s application engineers will be pleased to help you.

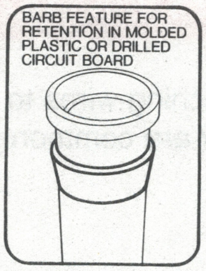
BARB FEATURE FOR RETENTION IN MOLDED PLASTIC OR DRILLED CIRCUIT BOARD

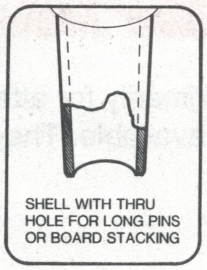
SHELL WITH THRU HOLE FOR LONG PINS OR BOARD STACKING

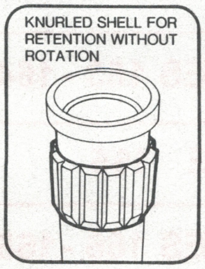
KNURLED SHELL FOR RETENTION WITHOUT ROTATION

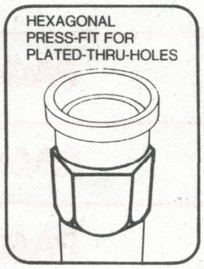
HEXAGONAL PRESS-FIT FOR PLATED-THRU-HOLES

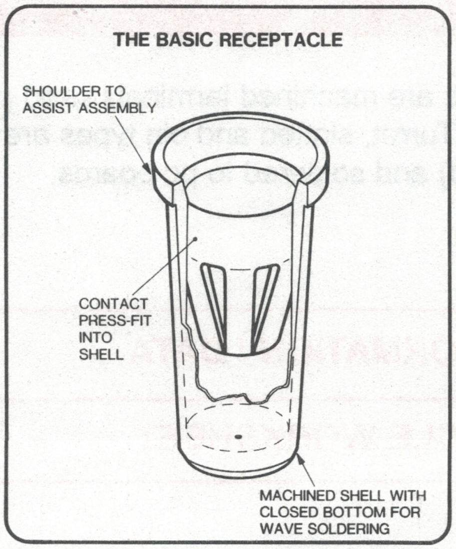
THE BASIC RECEPTACLE

SHOULDER TO ASSIST ASSEMBLY
CONTACT PRESS-FIT INTO SHELL
MACHINED SHELL WITH CLOSED BOTTOM FOR WAVE SOLDERING

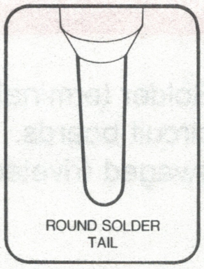
ROUND SOLDER TAIL

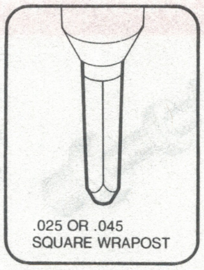
.025 OR .045 SQUARE WRAPOST

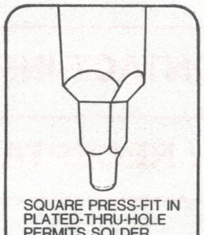
SQUARE PRESS-FIT IN PLATED-THRU-HOLE PERMITS SOLDER WICKING

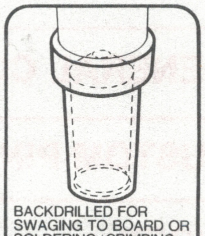
BACKDRILLED FOR SWAGING TO BOARD OR SOLDERING/CRIMPING TO WIRE

SPECIFICATIONS

Materials:

BRASS ALLOY 360 UNS C36000 ASTM-B16-85
PHOSPHOR BRONZE Alloy 544 UNS C54400 ASTM-B139-90
BERYLLIUM COPPER (contacts) UNS C17200 ASTM-B194-92
BERYLLIUM COPPER (machined) UNS C17300 ASTM-B196-90

Platings:

GOLD per MIL-G-45204, Type I, Grade C
SILVER per QQ-S-365, Type III, Grade A
TIN per MIL-T-10727, Type I
NICKEL per QQ-N-290
COPPER per MIL-C-14550
ELECTROLESS NICKEL per MIL-C-26074
ELECTRO-SOLDER per MIL-P-81728

Where applicable, Mill-Max products and procedures are designed to meet the following general specifications

MIL-STD 105	-Sampling procedures
MIL-STD 109	-Quality assurance terms and definitions
MIL-STD 202E	-Test methods for electronic and electrical component parts
MIL-STD 1130B	-Connections, electrical, solderless, wrapped
MIL-STD 1344A	-Test methods for electrical connectors
MIL-STD 45662	-Calibration system requirements
MIL-C-39024	-General specification for connectors, electrical, jack, tip
MIL-C-39029	-General specification for contacts, electrical connector
MIL-F-14072	-Finished for ground system equipment
MIL-I-45208	-Inspection system requirements
MIL-I-45607	-Inspection equipment, acquisition, maintenance and disposition of
MIL-S-83505	-General specification for sockets (lead, electronic components)
MIL-S-83734	-General specification for DIP sockets
MIL-T-55155	-General specification for solder terminals
ASTM-E8	-Standard methods of tension testing of metallic materials
ASTM-E384-84	-Standard test methods for micro-hardness of materials
ASTM-B487-79	-Measuring metal coating thickness by examination of a cross-section
ASTM-A754-79	-Standard test method for coating thickness by X-ray florescence

In the interest of improved design and performance, Mill-Max reserves the right to make changes in its specifications without prior notice.

CUSTOM CAPABILITIES

Mill-Max has become the leading U.S. manufacturer of machined interconnect components through the evolution of high-speed turning technology. From our highly automated factory in Oyster Bay, on the north shore of Long Island, we ship in excess of 4 billion components annually. The facility houses over 500 production machines and a state-of-the-art plating department. Our "basket" plating process was developed specifically to achieve a gold or tin finish that is more uniform and controlled than conventional "barrel plating".

High-speed-turning is extremely competitive in mass production since it permits pins and receptacles to be manufactured in a fraction of the time, and at a fraction of the cost of processes involving swaging or stamping dies. Mill-Max also takes advantage of high-speed-turning to quickly deliver custom products; prototype quantities still economical.

Mill-Max complements high speed-turning with a comprehensive selection of pre-tooled "multi-finger" spring contacts (see selector chart on page 153). Receptacles are made by press-fitting one of these contacts into a precision machined shell. Your concept for a custom connector can be easily realized by selecting a standard Mill-Max contact and having it fitted into a custom machined shell.

The very art of high-speed turning limits Mill-Max to the use of "free-machining" alloys with diameters up to 3/16". Here is a list of stock materials and diameters available for custom manufacture:

BRASS Alloy 360, 1/2 hard:	.072/.078/.093/.125/.156/.187 diameters
BRASS Alloy 360, 1/4 hard:	.072/.078 diameters
BRASS TUBING:	.072 O.D.x.020 I.D./ .072 O.D.x.025 I.D.
PHOSPHOR BRONZE Alloy 544	.062/.072/.078 diameters
BERYLLIUM COPPER Alloy 173:	.062/.072/.078 diameters

Mill-Max will gladly quote custom made products: please complete the specification sheet on page 165 or send us your own drawings; we assure you of a fast response.

PIN RECEPTACLES
for .012 - .017 diameter pins

0464

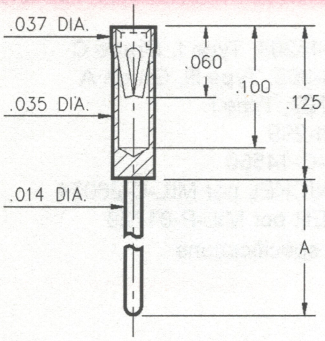
.037 DIA.
.035 DIA.
.014 DIA.
.060
.100
.125
A

Basic Part Number	Length A
0464-0	.125
0464-1	.250

0464-X-15-XX-10-XX-04-0

Solder mount in .016 min.
mounting hole

9225

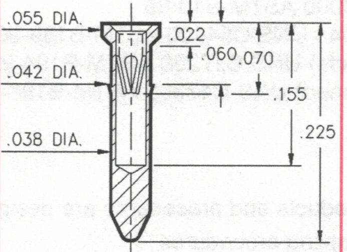
.055 DIA.
.042 DIA.
.038 DIA.
.022
.060
.070
.155
.225

9225-0-15-XX-10-XX-10-0

Press-fit in .039 mounting hole

0529

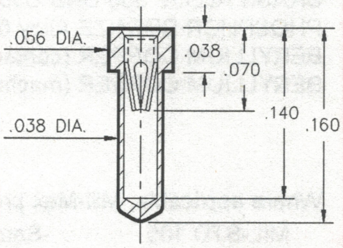
.056 DIA.
.038 DIA.
.038
.070
.140
.160

0529-0-15-XX-10-XX-10-0

.040 min. mounting hole

SPECIFICATIONS

SHELL MATERIAL:
Brass Alloy 360, 1/2 Hard

CONTACT MATERIAL:
Beryllium Copper Alloy 172, HT

DIMENSION IN INCHES
TOLERANCES ON:
LENGTHS: ± .005
DIAMETERS: ± .002
ANGLES: ± 2°

ORDER CODE: XXXX - X - 15 - XX - 10 - XX XX - 0

BASIC PART #

SPECIFY SHELL FINISH
01 200µ" TIN/LEAD OVER NICKEL
15 10µ" GOLD OVER NICKEL

CONTACT
# 10 CONTACT (DATA ON PAGE 155)

SPECIFY CONTACT FINISH
02 100µ" TIN/LEAD OVER NICKEL
14 10µ" GOLD OVER NICKEL
27 30µ" GOLD OVER NICKEL

# PIN RECEPTACLES
for .015 - .021 diameter pins

0548

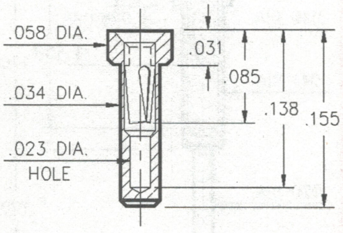
.058 DIA.
.034 DIA.
.023 DIA.
HOLE
.031
.085
.138
.155

0548-0-15-XX-21-XX-10-0
Solder mount in .036 min. mounting hole

1407

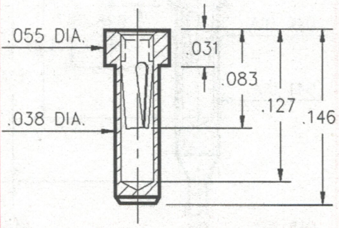
.055 DIA.
.038 DIA.
.031
.083
.127
.146

1407-0-15-XX-11-XX-10-0
Solder mount in .040 min. mounting hole

0554

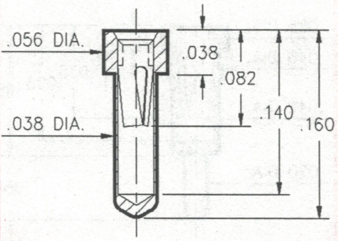
.056 DIA.
.038 DIA.
.038
.082
.140
.160

0554-0-15-XX-21-XX-10-0
Solder mount in .040 min. mounting hole

0569

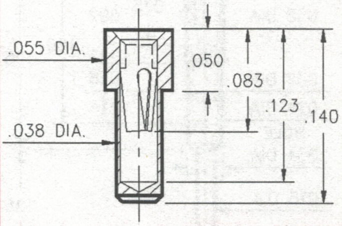
.055 DIA.
.038 DIA.
.050
.083
.123
.140

0569-0-15-XX-X1-XX-10-0
Solder mount in .040 min. mounting hole

0552

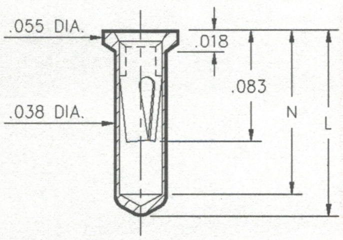
.055 DIA.
.038 DIA.
.018
.083
N
L

Basic Part Number	Length L	Depth N
0552-1	.136	.120
0552-2	.170	.150

0552-X-15-XX-X1-XX-10-0
Solder mount in .040 min. mounting hole

0553/8553

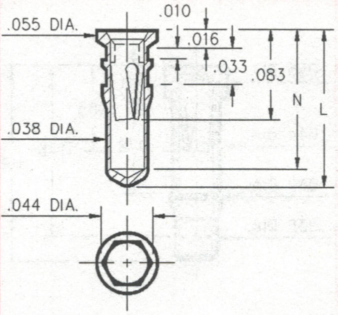
.010
.016
.033
.083
.055 DIA.
.038 DIA.
.044 DIA.
N
L

Basic Part Number	Length L	Depth N
0553-1	.140	.124
0553-2	.170	.154
0553-3	.282	.266
8553-0	.245	.229

X553-X-15-XX-X1-XX-10-0
Hex press-fit in .041 plated thru hole

0566

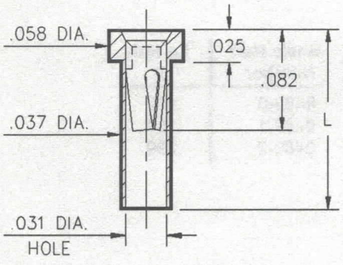
.058 DIA.
.037 DIA.
.031 DIA.
HOLE
.025
.082
L

Basic Part Number	Length L
0566-1	.083
0566-2	.138

0566-X-15-XX-21-XX-10-0
Solder mount in .039 min. mounting hole

0442

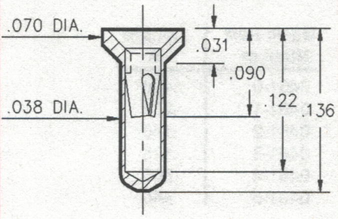
.070 DIA.
.038 DIA.
.031
.090
.122
.136

0442-0-15-XX-11-XX-10-0
Solder mount in .040 min. mounting hole

0560

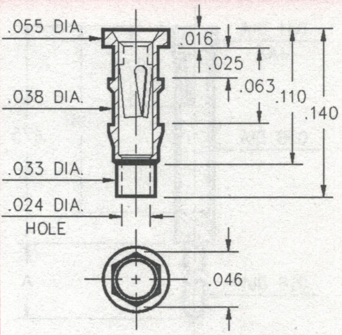
.055 DIA.
.038 DIA.
.033 DIA.
.024 DIA.
HOLE
.016
.025
.063
.110
.140
.046

0560-0-15-XX-11-XX-10-0
Hex press-fit in .042 plated thru hole

SPECIFICATIONS

SHELL MATERIAL:
Brass Alloy 360, 1/2 Hard
CONTACT MATERIAL:
Beryllium Copper Alloy 172, HT
DIMENSION IN INCHES
TOLERANCES ON:
LENGTHS: ± .005
DIAMETERS: ± .002
ANGLES: ± 2°

ORDER CODE: XXXX - X - 15 - XX - X1 - XX - 10 - 0

BASIC PART #

SPECIFY SHELL FINISH
01 200µ" TIN/LEAD OVER NICKEL
15 10µ" GOLD OVER NICKEL

SELECT CONTACT
# 11 OR **# 21** CONTACT (DATA ON PAGES 155 & 156)

SPECIFY CONTACT FINISH
02 100µ" TIN/LEAD OVER NICKEL
14 10µ" GOLD OVER NICKEL
27 30µ" GOLD OVER NICKEL

PIN RECEPTACLES
for .015 - .021 diameter pins

0467

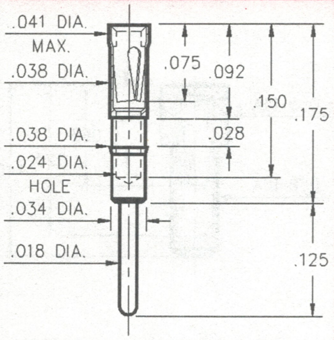
.041 DIA.
MAX.
.038 DIA.
.038 DIA.
.024 DIA.
HOLE
.034 DIA.
.018 DIA.
.075
.092
.028
.150
.175
.125

0467-0-15-XX-21-XX-04-0

Press-fit in .037 mounting hole

0463

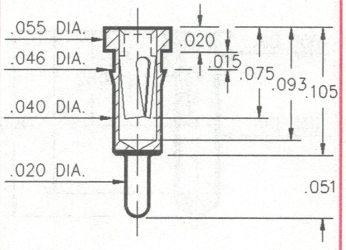
.055 DIA.
.046 DIA.
.040 DIA.
.020 DIA.
.020
.015
.075
.093
.105
.051

0463-0-15-XX-21-XX-04-0

Press-fit in .043 mounting hole.
Shell is Phos. Br. Alloy 544 (B2)

0466

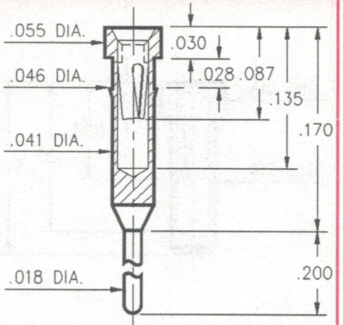
.055 DIA.
.046 DIA.
.041 DIA.
.018 DIA.
.030
.028
.087
.135
.170
.200

0466-0-15-XX-21-XX-04-0

Press-fit in .043 mounting hole.
Shell is Phos. Br. Alloy 544 (B2)

0462

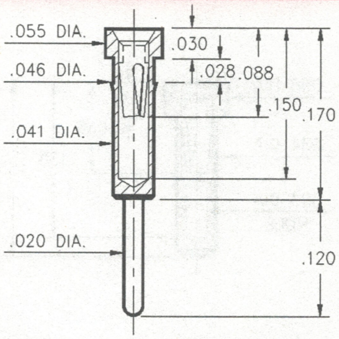
.055 DIA.
.046 DIA.
.041 DIA.
.020 DIA.
.030
.028
.088
.150
.170
.120

0462-0-15-XX-X1-XX-04-0

Press-fit in .043 mounting hole.

0579

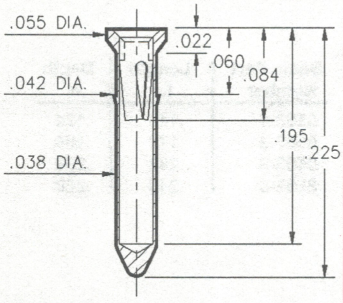
.055 DIA.
.042 DIA.
.038 DIA.
.022
.060
.084
.195
.225

0579-0-15-XX-X1-XX-10-0

Press-fit in .040 mounting hole

0613

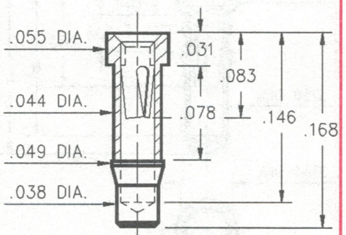
.055 DIA.
.044 DIA.
.049 DIA.
.038 DIA.
.031
.083
.078
.146
.168

0613-0-15-XX-21-XX-10-0

Press-fit in .047 mounting hole

9553

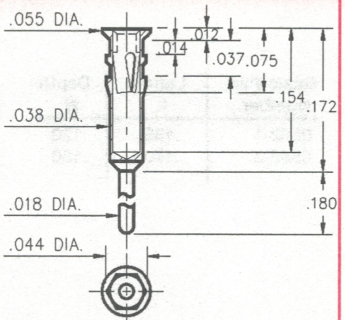
.055 DIA.
.038 DIA.
.018 DIA.
.044 DIA.
.012
.014
.037
.075
.154
.172
.180

9553-0-15-XX-X1-XX-04-0

Hex press-fit in .041
plated thru hole

0461

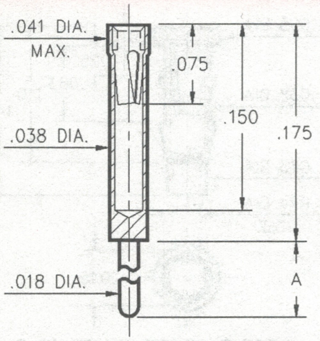
.041 DIA.
MAX.
.038 DIA.
.018 DIA.
.075
.150
.175
A

Basic Part Number	Length A
0461-0	.400
0461-1	.275
0461-2	.180
0461-3	.125
0461-4	.060
0461-5	.440

0461-X-15-XX-X1-XX-04-0

Solder mount in .020 min.
mounting hole

0489

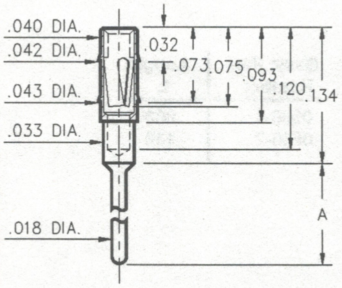
.040 DIA.
.042 DIA.
.043 DIA.
.033 DIA.
.018 DIA.
.032
.073
.075
.093
.120
.134
A

Basic Part Number	Length A
0489-0	.102
0489-1	.199
0489-2	.299

0489-X-15-XX-11-XX-04-0

Press-fit in .041 mounting hole.

SPECIFICATIONS

SHELL MATERIAL:
Brass Alloy 360, 1/2 Hard

CONTACT MATERIAL:
Beryllium Copper Alloy 172, HT

DIMENSION IN INCHES
TOLERANCES ON:

LENGTHS:	± .005
DIAMETERS:	± .002
ANGLES:	± 2°

ORDER CODE: XXXX - X - 15 - XX - X1 - XX - XX - 0

BASIC PART #

SPECIFY SHELL FINISH

01 200µ" TIN/LEAD OVER NICKEL
15 10µ" GOLD OVER NICKEL

SPECIFY CONTACT FINISH

02 100µ" TIN/LEAD OVER NICKEL
14 10µ" GOLD OVER NICKEL
27 30µ" GOLD OVER NICKEL

SELECT CONTACT
# 11 OR **# 21** CONTACT (DATA ON PAGES 155 & 156)

PIN RECEPTACLES
for .015 - .021 diameter pins

2086

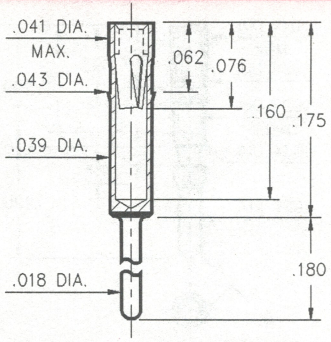
.041 DIA.
MAX.
.043 DIA.
.062
.076
.160
.175
.039 DIA.
.180
.018 DIA.

2086-0-15-XX-21-XX-04-0

Press-fit in .040 mounting hole

3016

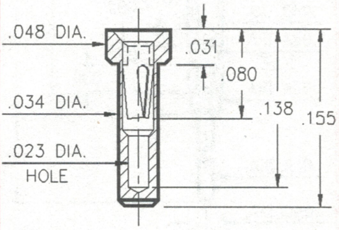
.048 DIA.
.031
.080
.034 DIA.
.138
.155
.023 DIA.
HOLE

3016-0-15-XX-21-XX-10-0

Solder mount in .036 min.
mounting hole

9548

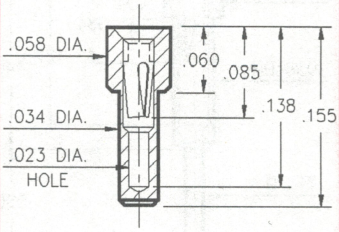
.058 DIA.
.060
.085
.034 DIA.
.138
.155
.023 DIA.
HOLE

9548-0-15-XX-21-XX-10-0

Solder mount in .036 min.
mounting hole

6023

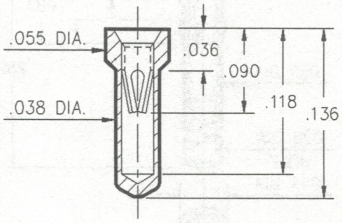
.055 DIA.
.036
.090
.038 DIA.
.118
.136

6023-0-15-XX-21-XX-10-0

Solder mount in .040 min.
mounting hole

5531

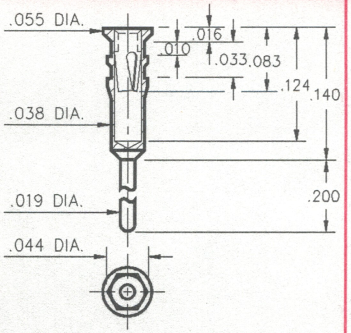
.055 DIA.
.016
.010
.033
.083
.124
.140
.038 DIA.
.019 DIA.
.200
.044 DIA.

5531-0-15-XX-21-XX-10-0

Hex press-fit in .041 plated
thru hole

5522

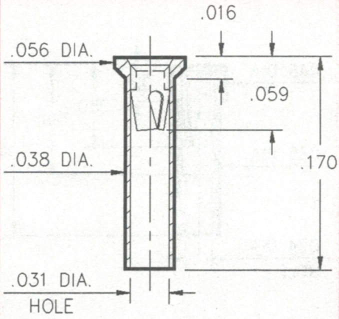
.016
.056 DIA.
.059
.038 DIA.
.170
.031 DIA.
HOLE

5522-0-15-XX-09-XX-10-0

Solder mount in .040 min.
mounting hole

SPECIFICATIONS

SHELL MATERIAL:
Brass Alloy 360, 1/2 Hard

CONTACT MATERIAL:
Beryllium Copper Alloy 172, HT

DIMENSION IN INCHES
TOLERANCES ON:

LENGTHS:	± .005
DIAMETERS:	± .002
ANGLES:	± 2°

ORDER CODE: XXXX - 0 - 15 - XX - X1 - XX - XX - 0

BASIC PART #

SPECIFY SHELL FINISH

01 200µ" TIN/LEAD OVER NICKEL
15 10µ" GOLD OVER NICKEL

SELECT CONTACT
# 11 OR **# 21** CONTACT (DATA ON PAGES 155 & 156)

SPECIFY CONTACT FINISH

02 100µ" TIN/LEAD OVER NICKEL
14 10µ" GOLD OVER NICKEL
27 30µ" GOLD OVER NICKEL

PIN RECEPTACLES
for .015 - .021 diameter pins

7553

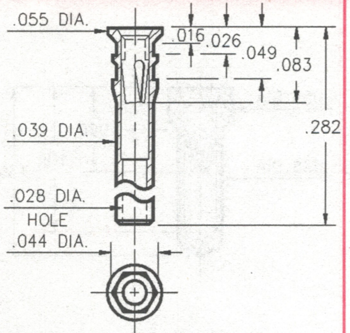
.055 DIA.
.016
.026
.049
.083
.039 DIA.
.282
.028 DIA.
HOLE
.044 DIA.

7553-0-15-XX-11-XX-10-0
Hex press-fit in .041 plated thru hole

9407

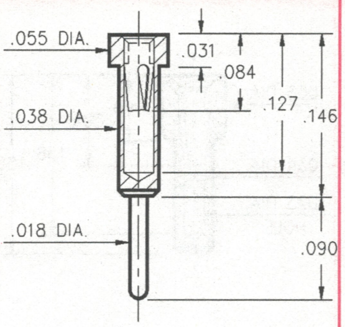
.055 DIA.
.031
.084
.127
.146
.038 DIA.
.018 DIA.
.090

9407-0-15-XX-11-XX-10-0
Solder mount in .040 min. mounting hole

8467

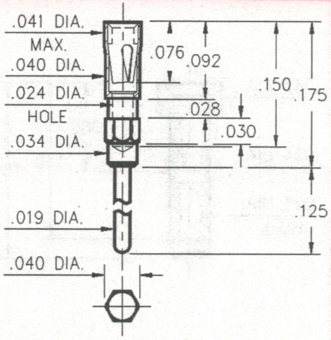
.041 DIA.
MAX.
.040 DIA.
.024 DIA.
HOLE
.034 DIA.
.076
.092
.028
.030
.150
.175
.125
.019 DIA.
.040 DIA.

8467-0-15-XX-21-XX-04-0
Hex press-fit in .036 plated thru hole

6192

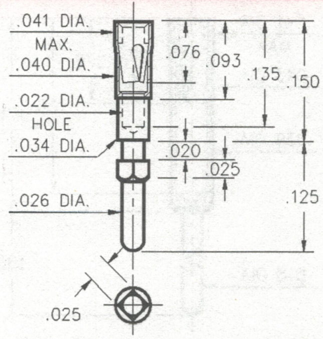
.041 DIA.
MAX.
.040 DIA.
.022 DIA.
HOLE
.034 DIA.
.076
.093
.135
.150
.020
.025
.026 DIA.
.125
.025

6192-0-15-XX-21-XX-04-0
Square press-fit in .032 plated thru hole

1147

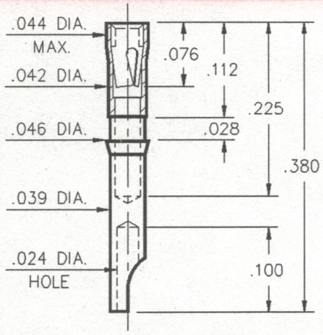
.044 DIA.
MAX.
.042 DIA.
.076
.112
.225
.028
.046 DIA.
.380
.039 DIA.
.024 DIA.
HOLE
.100

1147-0-18-XX-21-XX-10-0
Press-fit in .043 min. mounting hole

3061

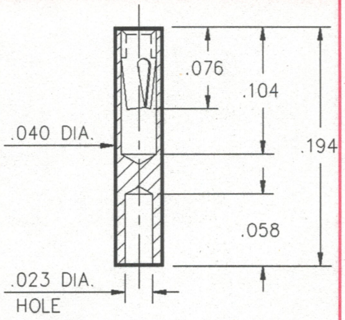
.076
.104
.194
.040 DIA.
.058
.023 DIA.
HOLE

3061-0-19-XX-21-XX-10-0
Wire Termination

8637

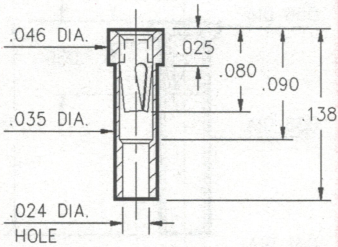
.046 DIA.
.025
.080
.090
.138
.035 DIA.
.024 DIA.
HOLE

8637-0-15-XX-21-XX-10-0
Solder mount in .037 min. mounting hole

SPECIFICATIONS

SHELL MATERIAL:
Brass Alloy 360, 1/2 Hard
CONTACT MATERIAL:
Beryllium Copper Alloy 172, HT
DIMENSION IN INCHES
TOLERANCES ON:
LENGTHS: ± .005
DIAMETERS: ± .002
ANGLES: ± 2°

ORDER CODE: XXXX - 0 - XX - XX - X1 - XX - XX - 0

BASIC PART #

SPECIFY SHELL FINISH
01 200µ" TIN/LEAD OVER NICKEL
15 10µ" GOLD OVER NICKEL

SPECIFY CONTACT FINISH
02 100µ" TIN/LEAD OVER NICKEL
14 10µ" GOLD OVER NICKEL
27 30µ" GOLD OVER NICKEL

SELECT CONTACT
# 11 OR **# 21** CONTACT (DATA ON PAGES 155 & 156)

PIN RECEPTACLES
for .015 - .022 diameter pins

0512

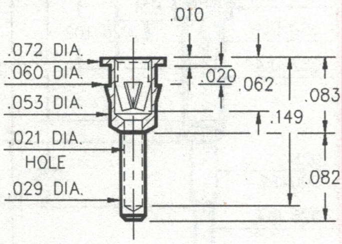
.072 DIA.
.060 DIA.
.053 DIA.
.021 DIA.
HOLE
.029 DIA.
.010
.020
.062
.083
.149
.082

0512-0-15-XX-12-XX-04-0

Press-fit in .057 mounting hole

2218

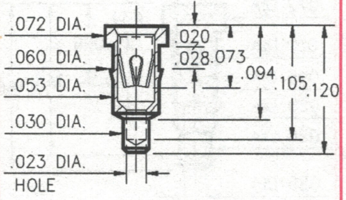
.072 DIA.
.060 DIA.
.053 DIA.
.030 DIA.
.023 DIA.
HOLE
.020
.028
.073
.094
.105
.120

2218-0-15-XX-22-XX-10-0

Press-fit in .057 mounting hole

0703

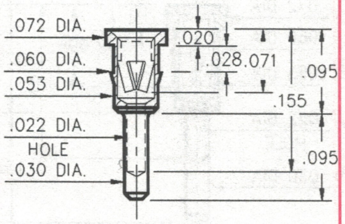
.072 DIA.
.060 DIA.
.053 DIA.
.022 DIA.
HOLE
.030 DIA.
.020
.028
.071
.095
.155
.095

0703-0-15-XX-12-XX-04-0

Press-fit in .057 mounting hole

0574

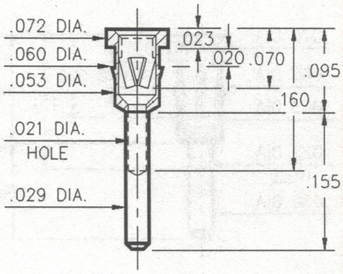
.072 DIA.
.060 DIA.
.053 DIA.
.021 DIA.
HOLE
.029 DIA.
.023
.020
.070
.095
.160
.155

0574-0-15-XX-12-XX-04-0

Press-fit in .057 mounting hole

0468

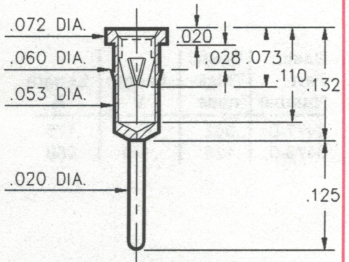
.072 DIA.
.060 DIA.
.053 DIA.
.020 DIA.
.020
.028
.073
.110
.132
.125

0468-0-15-XX-12-XX-04-0

Press-fit in .057 mounting hole

0550

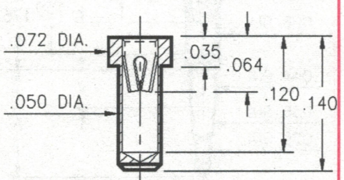
.072 DIA.
.050 DIA.
.035
.064
.120
.140

0550-0-15-XX-22-XX-10-0

Solder mount in .052 min mounting hole

0671

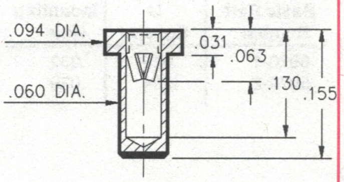
.094 DIA.
.060 DIA.
.031
.063
.130
.155

0671-0-15-XX-12-XX-10-0

Solder mount in .063 min mounting hole

0707

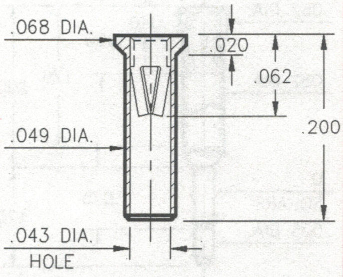
.068 DIA.
.049 DIA.
.043 DIA.
HOLE
.020
.062
.200

0707-0-15-XX-12-XX-10-0

Solder mount in .051 min mounting hole

SPECIFICATIONS

SHELL MATERIAL:
Brass Alloy 360, 1/2 Hard
CONTACT MATERIAL:
Beryllium Copper Alloy 172, HT
DIMENSION IN INCHES
TOLERANCES ON:

LENGTHS:	± .005
DIAMETERS:	± .002
ANGLES:	± 2°

ORDER CODE: XXXX - 0 - 15 - XX - X2 - XX - XX - 0

BASIC PART #

SPECIFY SHELL FINISH

01 200µ" TIN/LEAD OVER NICKEL
15 10µ" GOLD OVER NICKEL

SELECT CONTACT

# 12 OR **# 22** CONTACT (DATA ON PAGES 156 & 157)

SPECIFY CONTACT FINISH

02 100µ" TIN/LEAD OVER NICKEL
14 10µ" GOLD OVER NICKEL
27 30µ" GOLD OVER NICKEL

PIN RECEPTACLES
for .015 - .025 diameter pins

0501

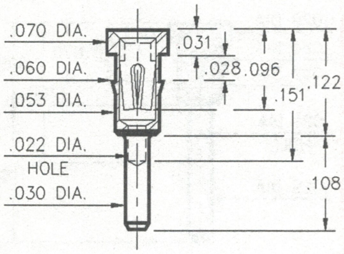

.070 DIA.
.060 DIA.
.053 DIA.
.022 DIA.
HOLE
.030 DIA.
.031
.028
.096
.151
.122
.108

0501-0-15-XX-30-XX-04-0

Press-fit in .057 mounting hole

8427

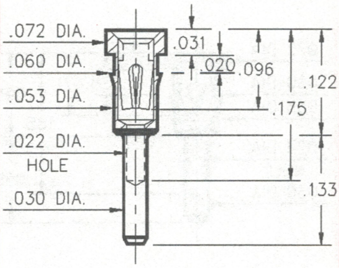

.072 DIA.
.060 DIA.
.053 DIA.
.022 DIA.
HOLE
.030 DIA.
.031
.020
.096
.122
.175
.133

8427-0-15-XX-30-XX-04-0

Press-fit in .057 mounting hole

1434

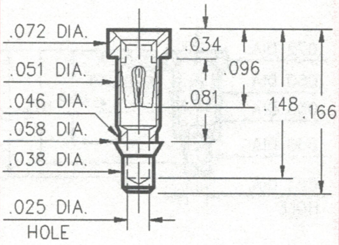

.072 DIA.
.051 DIA.
.046 DIA.
.058 DIA.
.038 DIA.
.025 DIA.
HOLE
.034
.096
.081
.148
.166

1434-0-15-XX-30-XX-10-0

Press-fit in .055 mounting hole

9970

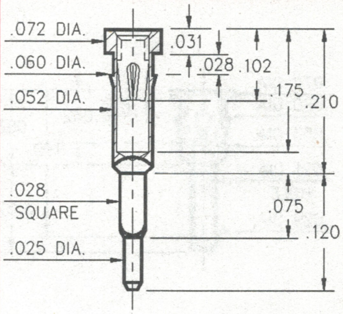

.072 DIA.
.060 DIA.
.052 DIA.
.028
SQUARE
.025 DIA.
.031
.028
.102
.175
.210
.075
.120

9970-0-15-XX-30-XX-04-0

Square press-fit for .032 ±.002 plated thru hole

5970

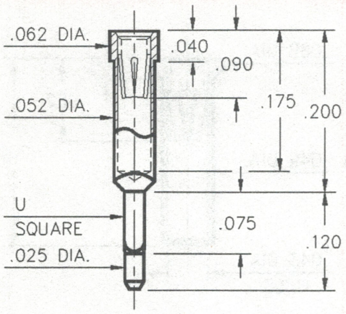

.062 DIA.
.052 DIA.
U
SQUARE
.025 DIA.
.040
.090
.175
.200
.075
.120

Basic Part Number	U Square	Mounting Hole
5970-1	.028	.032
5970-2	.034	.039

5970-X-15-XX-32-XX-04-0

Square press-fit for .032 or .039 ±.002 plated thru hole

0477/0478

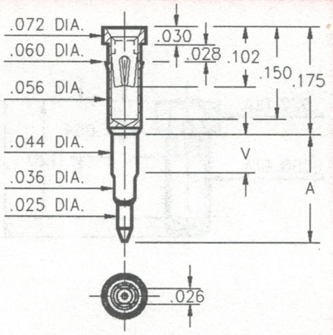

.072 DIA.
.060 DIA.
.056 DIA.
.044 DIA.
.036 DIA.
.025 DIA.
.030
.028
.102
.150
.175
V
A
.026

Basic Part Number	Board Thick-ness	Length V	Length A
0477-0	.062	.075	.175
0478-0	.125	.140	.250

047X-0-18-XX-30-XX-04-0

Solderless press-fit in .038 $^{+.003}_{-.002}$ plated thru hole. (Use 1.1 mm drill prior to plating)

4612

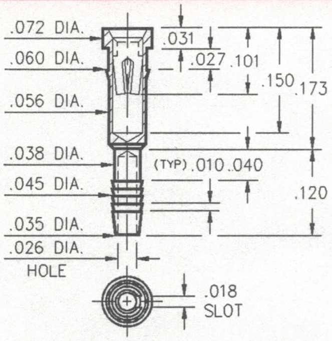

.072 DIA.
.060 DIA.
.056 DIA.
.038 DIA.
.045 DIA.
.035 DIA.
.026 DIA.
HOLE
.031
.027
.101
.150
.173
(TYP) .010
.040
.120
.018
SLOT

4612-0-31-XX-30-XX-04-0

Compliant press-fit in .040±.003 plated hole. For .060→ .100 thick board.

4613

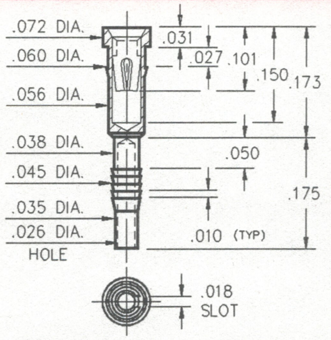

.072 DIA.
.060 DIA.
.056 DIA.
.038 DIA.
.045 DIA.
.035 DIA.
.026 DIA.
HOLE
.031
.027
.101
.150
.173
.050
.175
.010 (TYP)
.018
SLOT

4613-0-31-XX-30-XX-04-0

Compliant press-fit in .040±.003 plated hole. For .090→ .130 thick board.

0680

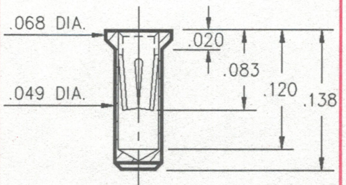

.068 DIA.
.049 DIA.
.020
.083
.120
.138

0680-0-15-XX-32-XX-10-0

Solder mount in .051 min. mounting hole

0149

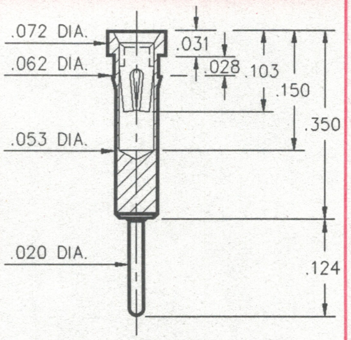

.072 DIA.
.062 DIA.
.053 DIA.
.020 DIA.
.031
.028
.103
.150
.350
.124

0149-0-15-XX-30-XX-04-0

Press-fit in .059 mounting hole

SPECIFICATIONS

SHELL MATERIAL:
Brass Alloy 360, 1/2 Hard

CONTACT MATERIAL:
Beryllium Copper Alloy 172, HT

DIMENSION IN INCHES
TOLERANCES ON:

LENGTHS:	± .005
DIAMETERS:	± .002
ANGLES:	± 2°

ORDER CODE: XXXX - X - XX - XX - 3X - XX - XX - 0

BASIC PART #

SPECIFY SHELL FINISH
01 200μ" TIN/LEAD OVER NICKEL
15 10μ" GOLD OVER NICKEL

SELECT CONTACT
# 30 OR **# 32** CONTACT (DATA ON PAGES 157 & 158)

SPECIFY CONTACT FINISH
02 100μ" TIN/LEAD OVER NICKEL
14 10μ" GOLD OVER NICKEL
27 30μ" GOLD OVER NICKEL

# PIN RECEPTACLES
for .015 - .025 diameter pins

0660

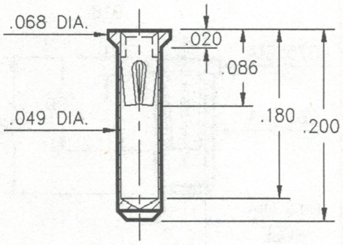
.068 DIA.
.020
.086
.049 DIA.
.180
.200

0660-0-15-XX-30-XX-10-0
Solder mount in .051 min.
mounting hole.

0677

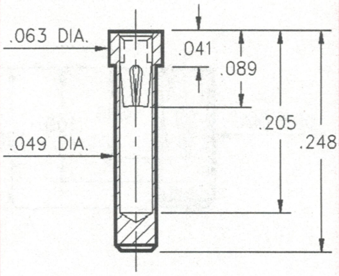
.063 DIA.
.041
.089
.205
.049 DIA.
.248

0677-0-15-XX-30-XX-10-0
Solder mount in .051 min.
mounting hole.

0555

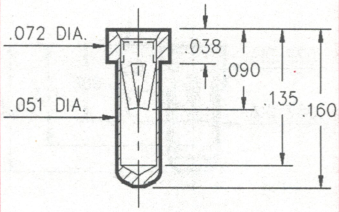
.072 DIA.
.038
.090
.051 DIA.
.135
.160

0555-0-15-XX-20-XX-10-0
Solder mount in .053 min.
mounting hole.

1401

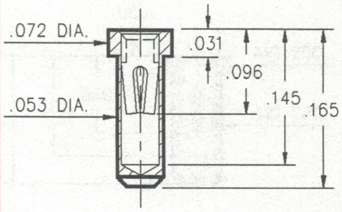
.072 DIA.
.031
.096
.053 DIA.
.145
.165

1401-0-15-XX-30-XX-10-0
Solder mount in .055 min.
mounting hole.

0675/0679

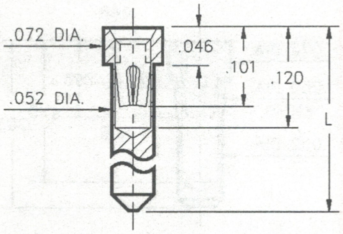
.072 DIA.
.046
.101
.120
.052 DIA.
L

Basic Part Number	Length L
0675-0	.145
0679-0	.203

067X-0-15-XX-30-XX-10-0
Solder mount in .054 min.
mounting hole.

1065/1066

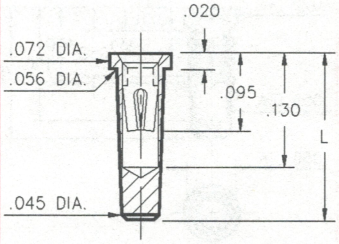
.020
.072 DIA.
.056 DIA.
.095
.130
L
.045 DIA.

Basic Part Number	Length L
1065-0	.190
1066-0	.160

106X-0-15-XX-30-XX-10-0
Solder mount in .055 min.
mounting hole.

0682

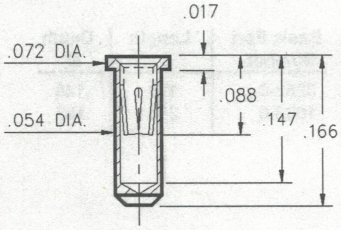
.017
.072 DIA.
.088
.054 DIA.
.147
.166

0682-0-15-XX-32-XX-10-0
Solder mount in .056 min.
mounting hole.

0667

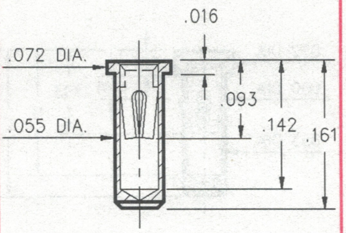
.016
.072 DIA.
.093
.055 DIA.
.142
.161

0667-0-15-XX-30-XX-10-0
Solder mount in .057 min.
mounting hole.

0665

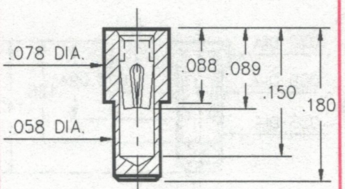
.078 DIA.
.088
.089
.150
.180
.058 DIA.

0665-0-15-XX-30-XX-10-0
Solder mount in .061 min.
mounting hole.

0558

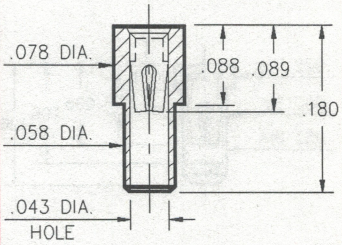
.078 DIA.
.088
.089
.180
.058 DIA.
.043 DIA.
HOLE

0558-0-15-XX-30-XX-10-0
Solder mount in .061 min.
mounting hole.

SPECIFICATIONS

SHELL MATERIAL:
Brass Alloy 360, 1/2 Hard

CONTACT MATERIAL:
Beryllium Copper Alloy 172, HT

DIMENSION IN INCHES
TOLERANCES ON:
LENGTHS: ± .005
DIAMETERS: ± .002
ANGLES: ± 2°

ORDER CODE: XXXX - 0 - 15 - XX - 3X - XX - 10 - 0

BASIC PART #

SPECIFY SHELL FINISH
01 200µ" TIN/LEAD OVER NICKEL
15 10µ" GOLD OVER NICKEL

SELECT CONTACT
#20, # 30 OR # 32 CONTACT (DATA ON PAGES 157 & 158)

SPECIFY CONTACT FINISH
02 100µ" TIN/LEAD OVER NICKEL
14 10µ" GOLD OVER NICKEL
27 30µ" GOLD OVER NICKEL

PIN RECEPTACLES
for .015 - .025 diameter pins

0669

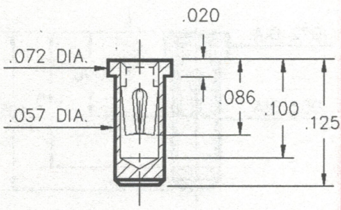
.020
.072 DIA.
.057 DIA.
.086
.100
.125

0669-0-15-XX-30-XX-10-0
Solder mount in .060 min. mounting hole

0670

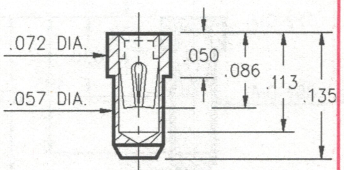
.072 DIA.
.057 DIA.
.050
.086
.113
.135

0670-0-15-XX-30-XX-10-0
Solder mount in .060 min. mounting hole

0673

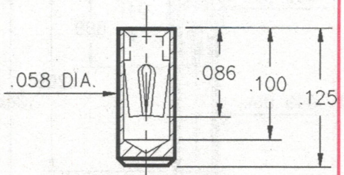
.058 DIA.
.086
.100
.125

0673-0-15-XX-30-XX-10-0
Surface Mount

0666

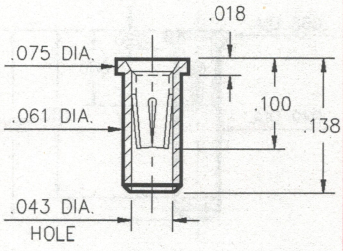
.018
.075 DIA.
.061 DIA.
.100
.138
.043 DIA.
HOLE

0666-0-15-XX-32-XX-10-0
Solder mount in .064 min. mounting hole

0341

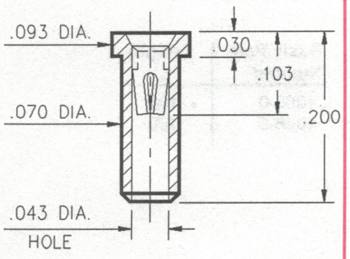
.093 DIA.
.030
.103
.070 DIA.
.200
.043 DIA.
HOLE

0341-0-15-XX-30-XX-10-0
Press-fit in .073 mounting hole

0252

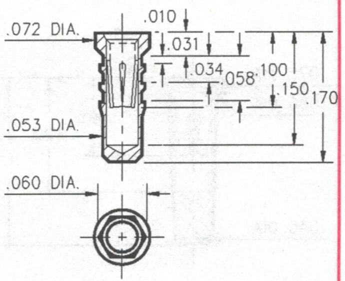
.072 DIA.
.010
.031
.034
.058
.100
.150
.170
.053 DIA.
.060 DIA.

0252-0-15-XX-32-XX-10-0
Hex press-fit in .057 plated thru hole

0678

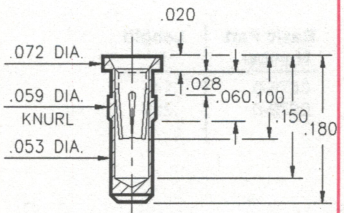
.020
.072 DIA.
.028
.060
.100
.059 DIA.
KNURL
.150
.180
.053 DIA.

0678-0-15-XX-32-XX-10-0
Press-fit in .057 mounting hole

0676

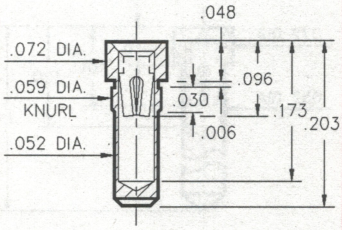
.048
.072 DIA.
.096
.059 DIA.
KNURL
.030
.173
.203
.006
.052 DIA.

0676-0-15-XX-30-XX-10-0
Press-fit in .057 mounting hole

0697

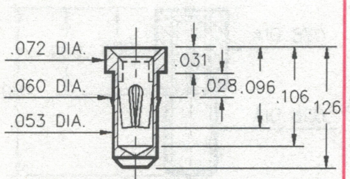
.072 DIA.
.031
.060 DIA.
.028
.096
.106
.126
.053 DIA.

0697-0-15-XX-30-XX-10-0
Press-fit in .057 mounting hole

0668

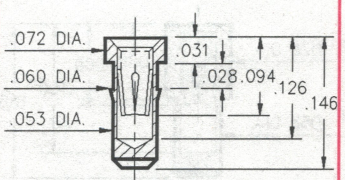
.072 DIA.
.031
.060 DIA.
.028
.094
.126
.146
.053 DIA.

0668-0-15-XX-30-XX-10-0
Press-fit in .057 mounting hole

0253/1033

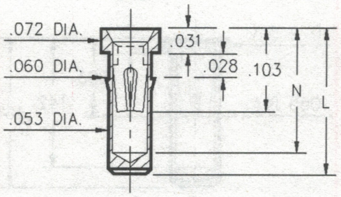
.072 DIA.
.031
.060 DIA.
.028
.103
N
L
.053 DIA.

Basic Part Number	Length L	Depth N
0253-0	.173	.148
1033-0	.203	.162

XXX3-0-15-XX-30-XX-10-0
Press-fit in .057 mounting hole

SPECIFICATIONS

SHELL MATERIAL:
Brass Alloy 360, 1/2 Hard

CONTACT MATERIAL:
Beryllium Copper Alloy 172, HT

DIMENSION IN INCHES
TOLERANCES ON:
LENGTHS: ± .005
DIAMETERS: ± .002
ANGLES: ± 2°

ORDER CODE: XXXX - 0 - 15 - XX - 3X - XX - 10 - 0

BASIC PART #

SPECIFY SHELL FINISH
01 200µ" TIN/LEAD OVER NICKEL
15 10µ" GOLD OVER NICKEL

SELECT CONTACT
# 30 OR **# 32** CONTACT (DATA ON PAGES 157 & 158)

SPECIFY CONTACT FINISH
02 100µ" TIN/LEAD OVER NICKEL
14 10µ" GOLD OVER NICKEL
27 30µ" GOLD OVER NICKEL

PIN RECEPTACLES
for .015 - .025 diameter pins

4011

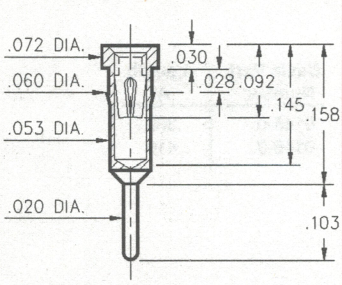
.072 DIA.
.060 DIA.
.053 DIA.
.020 DIA.
.030
.028
.092
.145
.158
.103

4011-0-15-XX-30-XX-04-0

Press-fit in .057 mounting hole

1801

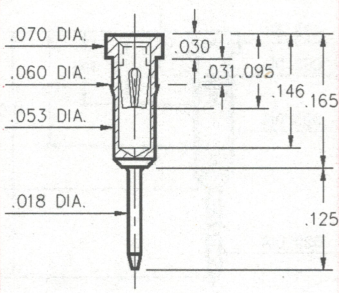
.070 DIA.
.060 DIA.
.053 DIA.
.018 DIA.
.030
.031
.095
.146
.165
.125

1801-0-15-XX-30-XX-04-0

Press-fit in .057 mounting hole
Shell is Ph. Br. Alloy 544 (B2)

1001

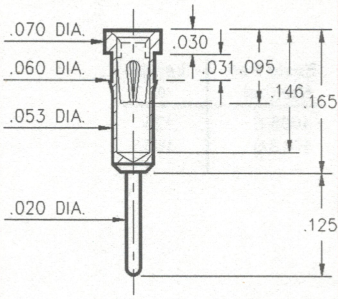
.070 DIA.
.060 DIA.
.053 DIA.
.020 DIA.
.030
.031
.095
.146
.165
.125

1001-0-15-XX-3X-XX-04-0

Press-fit in .057 mounting hole

0156

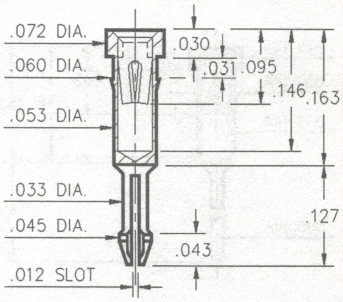
.072 DIA.
.060 DIA.
.053 DIA.
.033 DIA.
.045 DIA.
.012 SLOT
.030
.031
.095
.146
.163
.127
.043

0156-0-18-XX-30-XX-04-0

Self-retention socket pin.038-.043
hole prior to soldering

0255

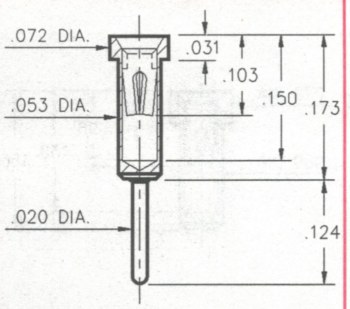
.072 DIA.
.053 DIA.
.020 DIA.
.031
.103
.150
.173
.124

0255-0-15-XX-30-XX-04-0

Solder mount in .022 min.
mounting hole

1109

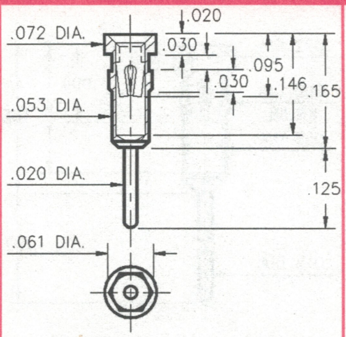
.072 DIA.
.053 DIA.
.020 DIA.
.061 DIA.
.020
.030
.095
.030
.146
.165
.125

1109-0-15-XX-30-XX-04-0

Hex press-fit in .057
plated thru hole

8607

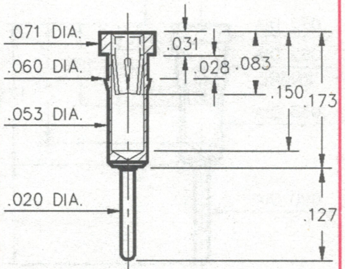
.071 DIA.
.060 DIA.
.053 DIA.
.020 DIA.
.031
.028
.083
.150
.173
.127

8607-0-15-XX-32-XX-04-0

Press-fit in .057 mounting hole

8180

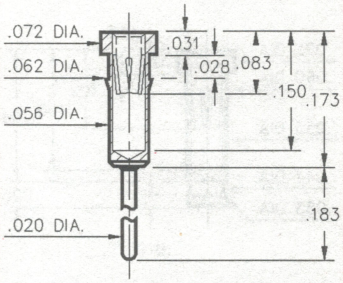
.072 DIA.
.062 DIA.
.056 DIA.
.020 DIA.
.031
.028
.083
.150
.173
.183

8180-0-15-XX-32-XX-04-0

Press-fit in .059 mounting hole

0132/0134/0135/0470

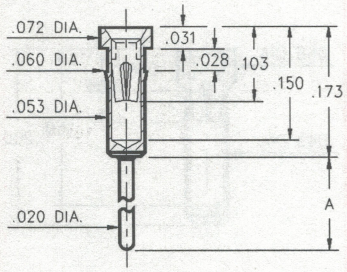
.072 DIA.
.060 DIA.
.053 DIA.
.020 DIA.
.031
.028
.103
.150
.173
A

Basic Part Number	Length A
0132-0	.273
0134-0	.170
0135-0	.183
0470-0	.127

0XXX-0-15-XX-32-XX-04-0

Press-fit in .057 mounting hole

0133/0147

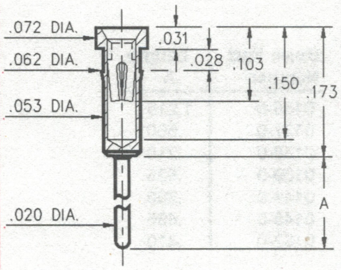
.072 DIA.
.062 DIA.
.053 DIA.
.020 DIA.
.031
.028
.103
.150
.173
A

Basic Part Number	Length A
0133-0	.382
0147-0	.563

01XX-0-15-XX-30-XX-04-0

Press-fit in .059 mounting hole

SPECIFICATIONS

SHELL MATERIAL:
Brass Alloy 360, 1/2 Hard

CONTACT MATERIAL:
Beryllium Copper Alloy 172, HT

DIMENSION IN INCHES

TOLERANCES ON:
LENGTHS: ± .005
DIAMETERS: ± .002
ANGLES: ± 2°

ORDER CODE: XXXX - 0 - 1X - XX - 3X - XX - X4 - 0

BASIC PART #

SPECIFY SHELL FINISH

01 200µ" TIN/LEAD OVER NICKEL
15 10µ" GOLD OVER NICKEL

SPECIFY CONTACT FINISH

02 100µ" TIN/LEAD OVER NICKEL
14 10µ" GOLD OVER NICKEL
27 30µ" GOLD OVER NICKEL

SELECT CONTACT

# 30 OR # 32 CONTACT (DATA ON PAGES 157 & 158)

PIN RECEPTACLES
for .015 - .025 diameter pins

1005/1013

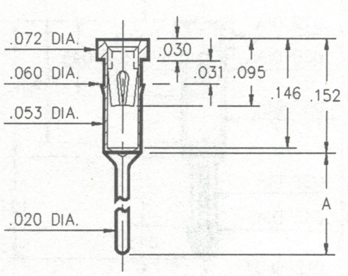
.072 DIA.
.060 DIA.
.053 DIA.
.020 DIA.
.030
.031
.095
.146
.152
A

Basic Part Number	Length A
1005-0	.138
1013-0	.165

10XX-0-15-XX-3X-XX-04-0

Press-fit in .057 mounting hole

1/4 hard brass shell for auto-clinching

0145/0146

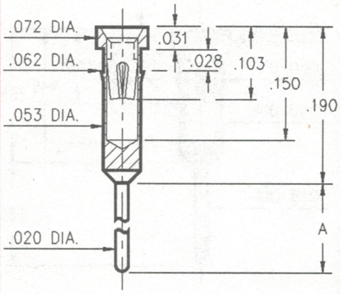
.072 DIA.
.062 DIA.
.053 DIA.
.020 DIA.
.031
.028
.103
.150
.190
A

Basic Part Number	Length A
0145-0	.300
0146-0	.410

014X-0-15-XX-30-XX-04-0

Press-fit in .059 mounting hole

4378

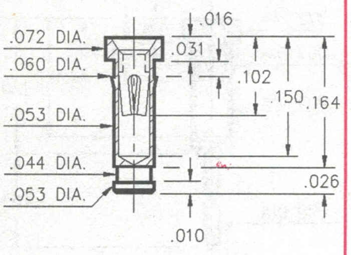
.072 DIA.
.060 DIA.
.053 DIA.
.044 DIA.
.053 DIA.
.016
.031
.102
.150
.164
.026
.010

4378-0-15-XX-30-XX-10-0

Press-fit in .057 mounting hole

0556

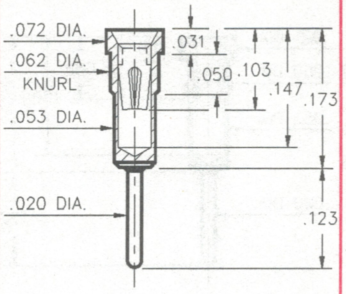
.072 DIA.
.062 DIA.
KNURL
.053 DIA.
.020 DIA.
.031
.050
.103
.147
.173
.123

0556-0-15-XX-30-XX-04-0

Press-fit in .059 mounting hole

1103

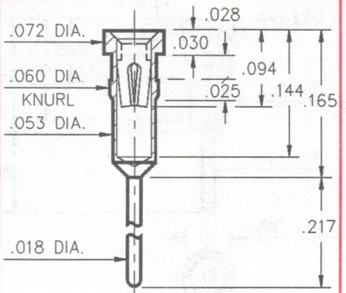
.072 DIA.
.060 DIA.
KNURL
.053 DIA.
.018 DIA.
.028
.030
.094
.025
.144
.165
.217

1103-0-15-XX-30-XX-04-0

Press-fit in .057 mounting hole

9234

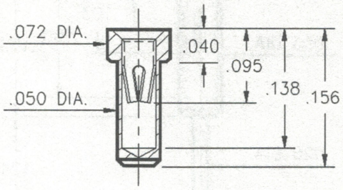
.072 DIA.
.050 DIA.
.040
.095
.138
.156

9234-0-15-XX-30-XX-10-0

Solder mount in .052 min. mounting hole

0136/37/38/39/41/48/52

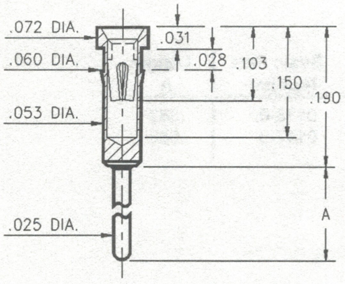
.072 DIA.
.060 DIA.
.053 DIA.
.025 DIA.
.031
.028
.103
.150
.190
A

Basic Part Number	Length A
0136-0	1.215
0137-0	.560
0138-0	.210
0139-0	.635
0141-0	.700
0148-0	.455
0152-0	.410

01XX-0-15-XX-30-XX-04-0

Press-fit in .057 mounting hole

0447

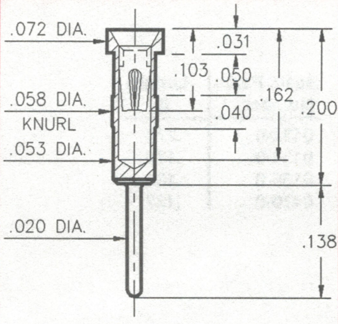
.072 DIA.
.058 DIA.
KNURL
.053 DIA.
.020 DIA.
.031
.103
.050
.040
.162
.200
.138

0447-0-15-XX-30-XX-04-0

Press-fit in .056 mounting hole

5660

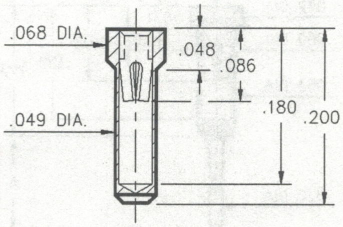
.068 DIA.
.049 DIA.
.048
.086
.180
.200

5660-0-15-XX-30-XX-10-0

Solder mount in .051 min. mounting hole

SPECIFICATIONS

SHELL MATERIAL:
Brass Alloy 360, 1/2 Hard

CONTACT MATERIAL:
Beryllium Copper Alloy 172, HT

DIMENSION IN INCHES
TOLERANCES ON:
LENGTHS: ± .005
DIAMETERS: ± .002
ANGLES: ± 2°

ORDER CODE: XXXX - 0 - 15 - XX - 3X - XX - XX - 0

BASIC PART #

SPECIFY SHELL FINISH
01 200µ" TIN/LEAD OVER NICKEL
15 10µ" GOLD OVER NICKEL

SELECT CONTACT
# 30 OR **# 32** CONTACT (DATA ON PAGES 157 & 158)

SPECIFY CONTACT FINISH
02 100µ" TIN/LEAD OVER NICKEL
14 10µ" GOLD OVER NICKEL
27 30µ" GOLD OVER NICKEL

PIN RECEPTACLES
for .015 - .025 diameter pins

7132

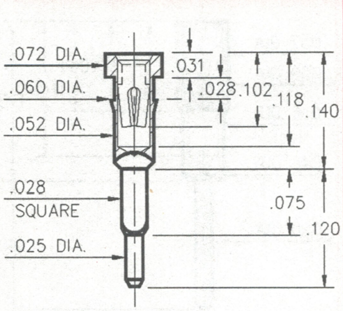

.072 DIA.
.060 DIA.
.052 DIA.
.028 SQUARE
.025 DIA.
.031
.028
.102
.118
.140
.075
.120

7132-0-15-XX-30-XX-04-0
Square press-fit for .032 ±.002 plated thru hole

8445

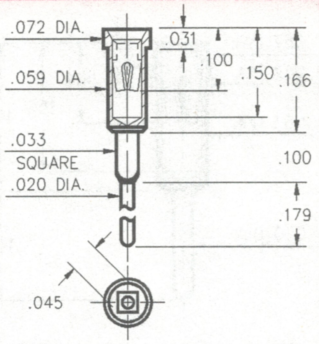

.072 DIA.
.059 DIA.
.033 SQUARE
.020 DIA.
.045
.031
.100
.150
.166
.100
.179

8445-0-15-XX-30-XX-04-0
Square press-fit in .039 ±.002 plated thru hole

1038

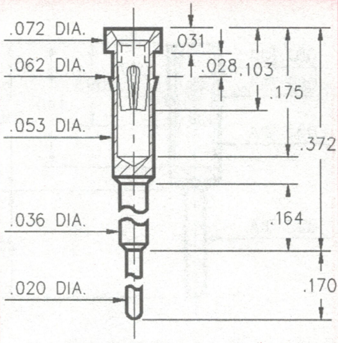

.072 DIA.
.062 DIA.
.053 DIA.
.036 DIA.
.020 DIA.
.031
.028
.103
.175
.372
.164
.170

1038-0-15-XX-30-XX-04-0
Press-fit in .059 mounting hole

1261

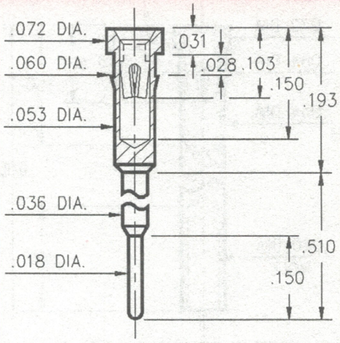

.072 DIA.
.060 DIA.
.053 DIA.
.036 DIA.
.018 DIA.
.031
.028
.103
.150
.193
.510
.150

1261-0-15-XX-30-XX-04-0
Press-fit in .057 mounting hole

0153

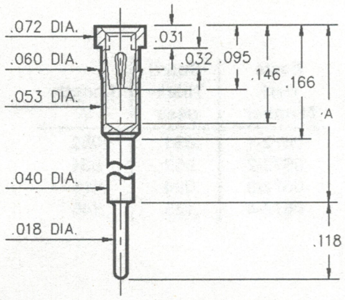

.072 DIA.
.060 DIA.
.053 DIA.
.040 DIA.
.018 DIA.
.031
.032
.095
.146
.166
A
.118

Basic Part Number	Height A
0153-1	.236
0153-2	.315
0153-3	.402
0153-4	.472
0153-5	.594
0153-6	.699

0153-X-15-XX-30-XX-04-0
Press-fit in .057 mounting hole

1602/1610

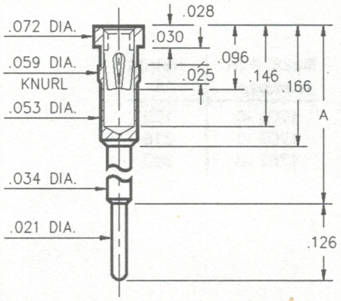

.072 DIA.
.059 DIA. KNURL
.053 DIA.
.034 DIA.
.021 DIA.
.028
.030
.096
.025
.146
.166
A
.126

Basic Part Number	Height A
1602-0	.441
1610-0	.642

16XX-0-15-XX-30-XX-04-0
Press-fit in .057 mounting hole

0903/0904

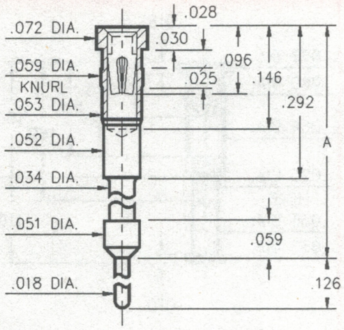

.072 DIA.
.059 DIA. KNURL
.053 DIA.
.052 DIA.
.034 DIA.
.051 DIA.
.018 DIA.
.028
.030
.096
.025
.146
.292
A
.059
.126

Basic Part Number	Height A
0903-0	.841
0904-0	1.141

090X-0-15-XX-30-XX-04-0
Press-fit in .057 mounting hole

0144

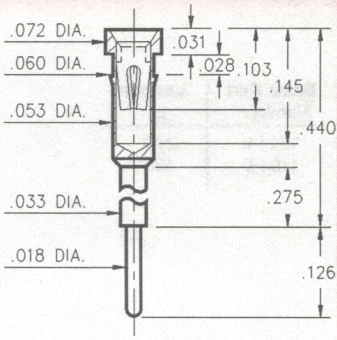

.072 DIA.
.060 DIA.
.053 DIA.
.033 DIA.
.018 DIA.
.031
.028
.103
.145
.440
.275
.126

0144-0-15-XX-30-XX-04-0
Press-fit in .057 mounting hole

8252

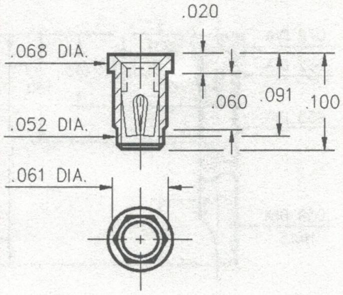

.068 DIA.
.052 DIA.
.061 DIA.
.020
.060
.091
.100

8252-0-15-XX-30-XX-10-0
Hex Press-fit in .056 mounting hole

SPECIFICATIONS

SHELL MATERIAL:
Brass Alloy 360, 1/2 Hard

CONTACT MATERIAL:
Beryllium Copper Alloy 172, HT

DIMENSION IN INCHES
TOLERANCES ON:

LENGTHS:	± .005
DIAMETERS:	± .002
ANGLES:	± 2°

ORDER CODE: XXXX - X - 15 - XX - 30 - XX - XX - 0

BASIC PART #

SPECIFY SHELL FINISH
01 200µ" TIN/LEAD OVER NICKEL
15 10µ" GOLD OVER NICKEL

SPECIFY CONTACT FINISH
02 100µ" TIN/LEAD OVER NICKEL
14 10µ" GOLD OVER NICKEL
27 30µ" GOLD OVER NICKEL

CONTACT
# 30 CONTACT (DATA ON PAGE 157)

# PIN RECEPTACLES
for .015 - .025 diameter pins

1707

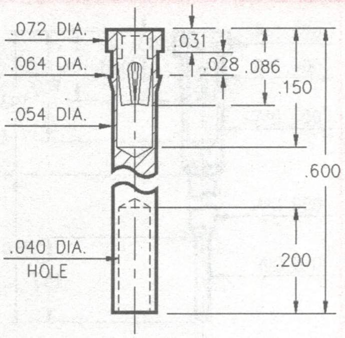
.072 DIA.
.064 DIA.
.054 DIA.
.040 DIA.
HOLE
.031
.028
.086
.150
.600
.200

1707-0-19-XX-30-XX-10-0
Press-fit in .061 mounting hole

0240

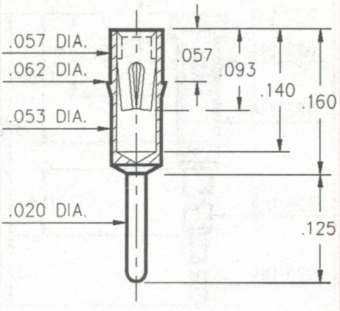
.057 DIA.
.062 DIA.
.053 DIA.
.020 DIA.
.057
.093
.140
.160
.125

0240-0-15-XX-30-XX-04-0
Press-fit in .059 mounting hole

0307

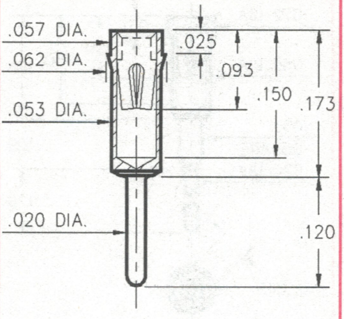
.057 DIA.
.062 DIA.
.053 DIA.
.020 DIA.
.025
.093
.150
.173
.120

0307-0-15-XX-30-XX-04-0
Press-fit in .059 mounting hole

1753

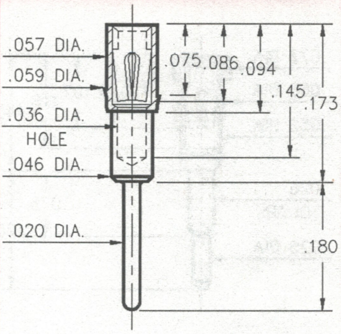
.057 DIA.
.059 DIA.
.036 DIA.
HOLE
.046 DIA.
.020 DIA.
.075
.086
.094
.145
.173
.180

1753-0-15-XX-30-XX-04-0
Press-fit in .057 mounting hole

1705/1706/1762

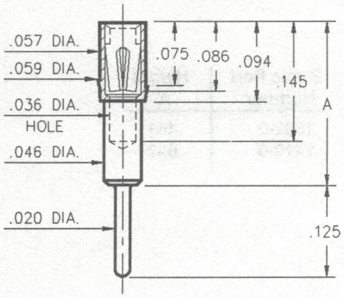
.057 DIA.
.059 DIA.
.036 DIA.
HOLE
.046 DIA.
.020 DIA.
.075
.086
.094
.145
A
.125

Basic Part Number	Height A
1705 -0	.165
1706 -0	.218
1762 -0	.300

17XX-0-15-XX-35-XX-04-0
Press-fit in .057 mounting hole

0672

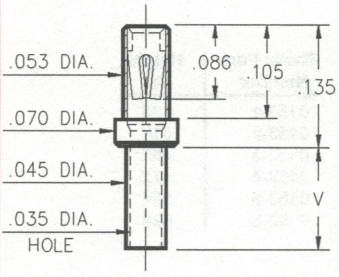
.053 DIA.
.070 DIA.
.045 DIA.
.035 DIA.
HOLE
.086
.105
.135
V

Basic Part Number	Board Thick-ness	Length V
0672-1	.031	.052
0672-2	.062	.084
0672-3	.094	.115
0672-4	.125	.146

0672-X-15-XX-30-XX-10-0
Swage mount in .049 hole

1024/1104

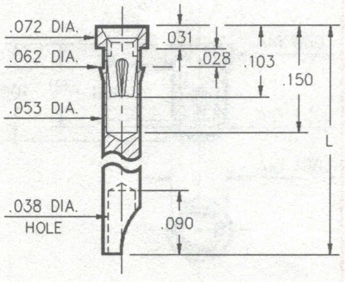
.072 DIA.
.062 DIA.
.053 DIA.
.038 DIA.
HOLE
.031
.028
.103
.150
L
.090

Basic Part Number	Length L
1024-0	.290
1104-0	.450

1XX4-0-18-XX-30-XX-10-0
Press-fit in .059 mounting hole

0498

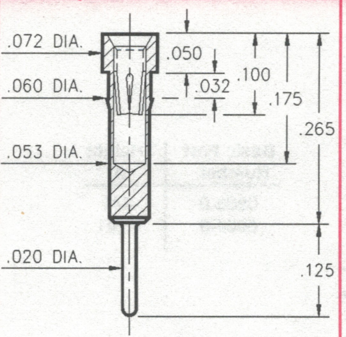
.072 DIA.
.060 DIA.
.053 DIA.
.020 DIA.
.050
.032
.100
.175
.265
.125

0498-0-15-XX-35-XX-04-0
Press-fit in .057 mounting hole

8131

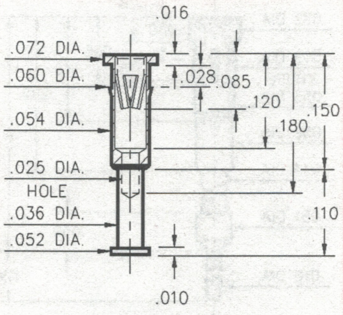
.016
.072 DIA.
.060 DIA.
.054 DIA.
.025 DIA.
HOLE
.036 DIA.
.052 DIA.
.028
.085
.120
.150
.180
.110
.010

8131-0-15-XX-30-XX-10-0
Press-fit in .057 mounting hole

SPECIFICATIONS

SHELL MATERIAL:
Brass Alloy 360, 1/2 Hard
CONTACT MATERIAL:
Beryllium Copper Alloy 172, HT
DIMENSION IN INCHES
TOLERANCES ON:
LENGTHS: ± .005
DIAMETERS: ± .002
ANGLES: ± 2°

ORDER CODE: XXXX - X - 1X - XX - XX - XX - XX - 0

BASIC PART #

SPECIFY SHELL FINISH
01 200µ" TIN/LEAD OVER NICKEL
15 10µ" GOLD OVER NICKEL

SELECT CONTACT
# 30 OR **# 35** CONTACT (DATA ON PAGES 157 & 158)

SPECIFY CONTACT FINISH
02 100µ" TIN/LEAD OVER NICKEL
14 10µ" GOLD OVER NICKEL
27 30µ" GOLD OVER NICKEL

PIN RECEPTACLES
for .015 - .025 diameter pins

1802

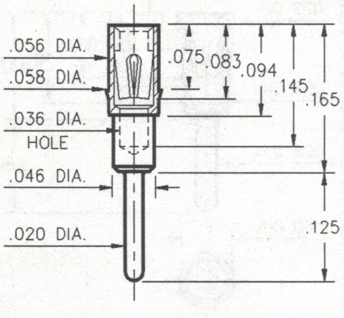

.056 DIA.
.058 DIA.
.036 DIA.
HOLE
.046 DIA.
.020 DIA.
.075
.083
.094
.145
.165
.125

1802-0-15-XX-43-XX-04-0

Press-fit in .057 mounting hole

1807

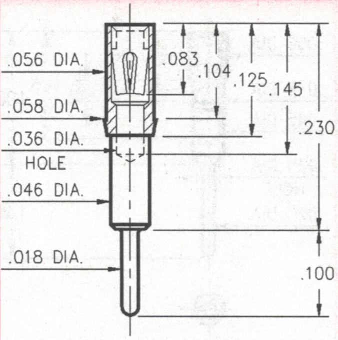

.056 DIA.
.058 DIA.
.036 DIA.
HOLE
.046 DIA.
.018 DIA.
.083
.104
.125
.145
.230
.100

1807-0-15-XX-43-XX-04-0

Press-fit in .057 mounting hole

1803/1805

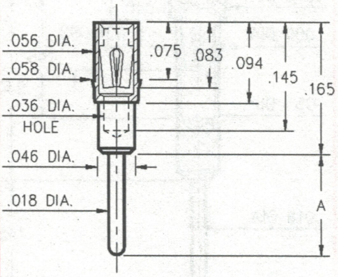

.056 DIA.
.058 DIA.
.036 DIA.
HOLE
.046 DIA.
.018 DIA.
.075
.083
.094
.145
.165
A

Basic Part Number	Length A
1803-0	.145
1805-0	.213

180X-0-15-XX-43-XX-04-0

Press-fit in .057 mounting hole

1804/1806

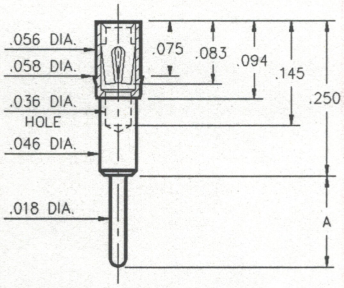

.056 DIA.
.058 DIA.
.036 DIA.
HOLE
.046 DIA.
.018 DIA.
.075
.083
.094
.145
.250
A

Basic Part Number	Length A
1804-0	.080
1806-0	.115

180X-0-15-XX-43-XX-04-0

Press-fit in .057 mounting hole

1808

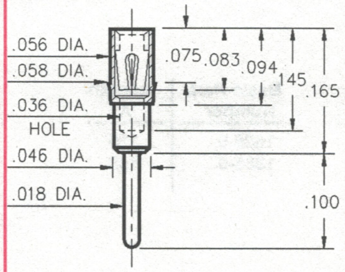

.056 DIA.
.058 DIA.
.036 DIA.
HOLE
.046 DIA.
.018 DIA.
.075
.083
.094
.145
.165
.100

1808-0-15-XX-43-XX-04-0

Press-fit in .057 mounting hole

SPECIFICATIONS

SHELL MATERIAL:
Brass Alloy 360, 1/2 Hard

CONTACT MATERIAL:
Beryllium Copper Alloy 172, HT

DIMENSION IN INCHES
TOLERANCES ON:

LENGTHS:	± .005
DIAMETERS:	± .002
ANGLES:	± 2°

ORDER CODE: XXXX - 0 - 1X - XX - XX - XX - XX - 0

BASIC PART #

SPECIFY SHELL FINISH

01 200µ" TIN/LEAD OVER NICKEL
15 10µ" GOLD OVER NICKEL

SELECT CONTACT
# 43 CONTACT (DATA ON PAGES 159)

SPECIFY CONTACT FINISH

02 100µ" TIN/LEAD OVER NICKEL
14 10µ" GOLD OVER NICKEL
27 30µ" GOLD OVER NICKEL

# PIN RECEPTACLES
for .015 - .025 diameter pins

0385

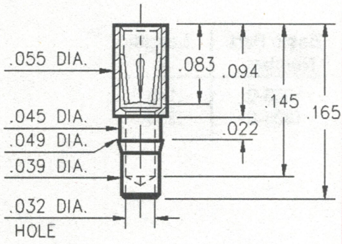
.055 DIA.
.045 DIA.
.049 DIA.
.039 DIA.
.032 DIA.
HOLE
.083
.094
.145
.165
.022

0385-0-15-XX-43-XX-10-0
Press-fit in .046 mounting hole

4001

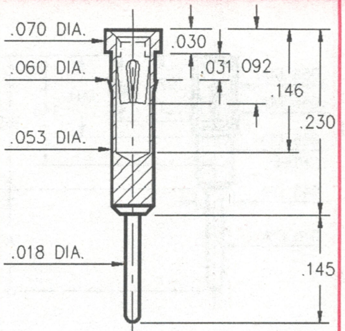
.070 DIA.
.060 DIA.
.053 DIA.
.018 DIA.
.030
.031
.092
.146
.230
.145

4001-0-15-XX-43-XX-04-0
Press-fit in .057 mounting hole

1782

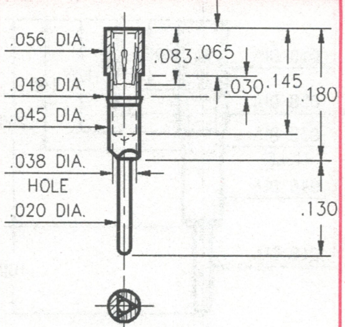
.056 DIA.
.048 DIA.
.045 DIA.
.038 DIA.
HOLE
.020 DIA.
.083
.065
.030
.145
.180
.130

1782-0-15-XX-43-XX-04-0
Press-fit in .045 mounting hole

5960

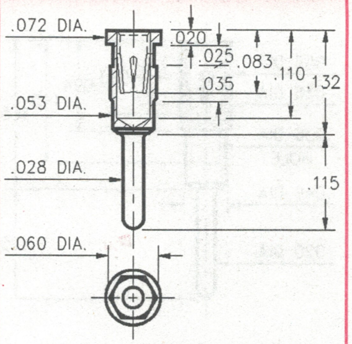
.072 DIA.
.053 DIA.
.028 DIA.
.060 DIA.
.020
.025
.035
.083
.110
.132
.115

5960-0-15-XX-43-XX-04-0
Hex press-fit in .057 plated hole

1665/1386

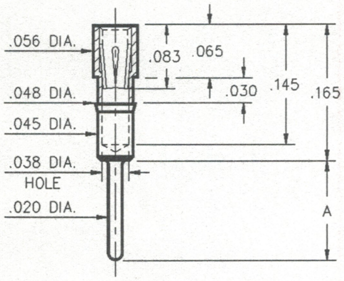
.056 DIA.
.048 DIA.
.045 DIA.
.038 DIA.
HOLE
.020 DIA.
.083
.065
.030
.145
.165
A

Basic Part Number	Length A
1665-0	.125
1386-0	.145

1XXX-0-15-XX-43-XX-04-0
Press-fit in .045 mounting hole

4310

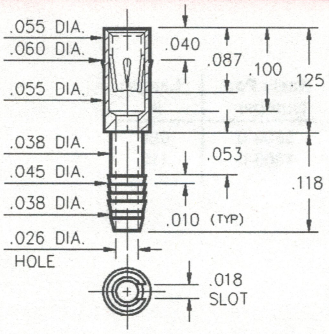
.055 DIA.
.060 DIA.
.055 DIA.
.038 DIA.
.045 DIA.
.038 DIA.
.026 DIA.
HOLE
.040
.087
.100
.125
.053
.118
.010 (TYP)
.018
SLOT

4310-0-31-XX-43-XX-04-0
Compliant press-fit in .040±.003 plated hole. For .090→.130 thick board.

SPECIFICATIONS

SHELL MATERIAL:
Brass Alloy 360, 1/2 Hard

CONTACT MATERIAL:
Beryllium Copper Alloy 172, HT

DIMENSION IN INCHES

TOLERANCES ON:

LENGTHS:	± .005
DIAMETERS:	± .002
ANGLES:	± 2°

ORDER CODE: XXXX - X - XX - XX - XX - XX - XX - 0

BASIC PART #

SPECIFY SHELL FINISH

01 200μ” TIN/LEAD OVER NICKEL
15 10μ” GOLD OVER NICKEL

SELECT CONTACT
# 43 CONTACT (DATA ON PAGE 159)

SPECIFY CONTACT FINISH

02 100μ” TIN/LEAD OVER NICKEL
14 10μ” GOLD OVER NICKEL
27 30μ” GOLD OVER NICKEL

PIN RECEPTACLES
for .020 - .032 diameter pins

0338

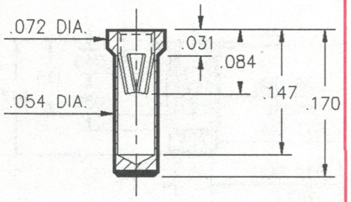

.072 DIA.
.054 DIA.
.031
.084
.147
.170

0338-0-15-XX-15-XX-10-0
Solder mount in .057 min. mounting hole

0378

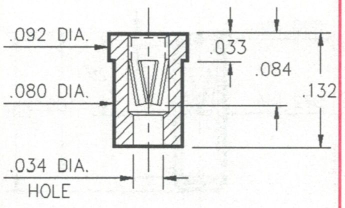

.092 DIA.
.080 DIA.
.034 DIA.
HOLE
.033
.084
.132

0378-0-15-XX-15-XX-10-0
Solder mount in .082 min. mounting hole

6002

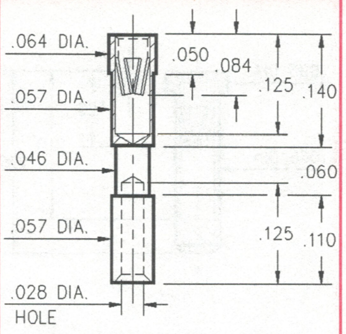

.064 DIA.
.057 DIA.
.046 DIA.
.057 DIA.
.028 DIA.
HOLE
.050
.084
.125
.140
.060
.125
.110

6002-0-19-XX-15-XX-10-0
Solder mount in .059 min. mounting hole

7009

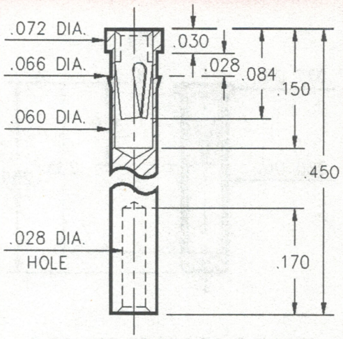

.072 DIA.
.066 DIA.
.060 DIA.
.028 DIA.
HOLE
.030
.028
.084
.150
.450
.170

7009-0-19-XX-15-XX-10-0
Press-fit in .063 mounting hole

SPECIFICATIONS

SHELL MATERIAL:
Brass Alloy 360, 1/2 Hard

CONTACT MATERIAL:
Beryllium Copper Alloy 172, HT

DIMENSION IN INCHES
TOLERANCES ON:
LENGTHS: ± .005
DIAMETERS: ± .002
ANGLES: ± 2°

ORDER CODE: XXXX - X - 1X - XX - 15 - XX - XX - 0

BASIC PART #

SPECIFY SHELL FINISH
01 200µ" TIN/LEAD OVER NICKEL
15 10µ" GOLD OVER NICKEL

SPECIFY CONTACT FINISH
01 200µ" TIN/LEAD OVER NICKEL
14 10µ" GOLD OVER NICKEL
27 30µ" GOLD OVER NICKEL

CONTACT
# 15 CONTACT (DATA ON PAGE 159)

PIN RECEPTACLES
for .022 - .032 diameter pins

0295

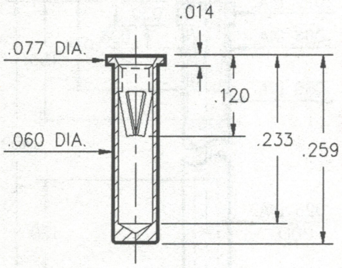
.014
.077 DIA.
.120
.060 DIA.
.233
.259

0295-0-15-XX-06-XX-10-0

Solder mount in .063 min. mounting hole

0292

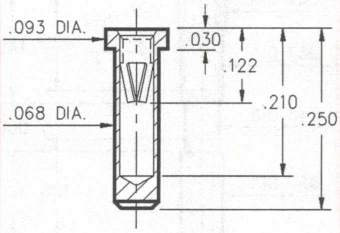
.093 DIA.
.030
.122
.068 DIA.
.210
.250

0292-0-15-XX-06-XX-10-0

Solder mount in .071 min. mounting hole

0294

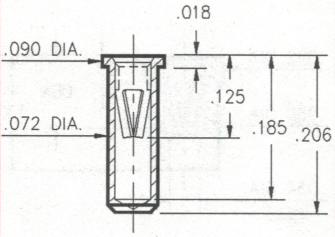
.018
.090 DIA.
.125
.072 DIA.
.185
.206

0294-0-15-XX-06-XX-10-0

Solder mount in .076 min. mounting hole

9019

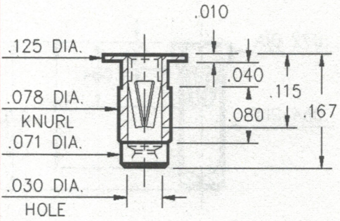
.010
.125 DIA.
.040
.115
.078 DIA. KNURL
.080
.167
.071 DIA.
.030 DIA. HOLE

9019-0-19-XX-06-XX-10-0

Press-fit in .075 mounting hole

0297

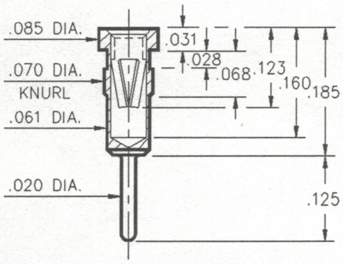
.085 DIA.
.031
.028
.068
.123
.160
.185
.070 DIA. KNURL
.061 DIA.
.020 DIA.
.125

0297-0-15-XX-06-XX-04-0

Press-fit in .067 mounting hole

0398

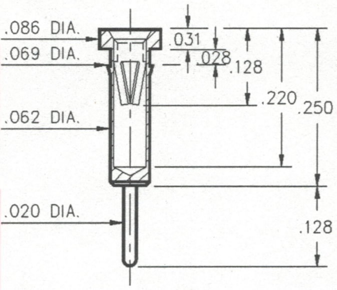
.086 DIA.
.031
.069 DIA.
.028
.128
.220
.250
.062 DIA.
.020 DIA.
.128

0398-0-15-XX-06-XX-04-0

Press-fit in .065 mounting hole

0397

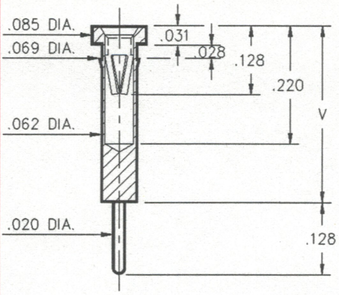
.085 DIA.
.031
.069 DIA.
.028
.128
.220
V
.062 DIA.
.020 DIA.
.128

Basic Part Number	Length V
0397-0	.353
0397-1	.333
0397-2	.413

0397-X-15-XX-06-XX-04-0

Press-fit in .065 mounting hole

SPECIFICATIONS

SHELL MATERIAL:
Brass Alloy 360, 1/2 Hard

CONTACT MATERIAL:
Beryllium Copper Alloy 172, HT

DIMENSION IN INCHES

TOLERANCES ON:

LENGTHS:	± .005
DIAMETERS:	± .002
ANGLES:	± 2°

ORDER CODE: XXXX - X - 1X - XX - 06 - XX - XX - 0

BASIC PART #

SPECIFY SHELL FINISH

01 200µ" TIN/LEAD OVER NICKEL
15 10µ" GOLD OVER NICKEL

CONTACT
# 06 CONTACT (DATA ON PAGE 159)

SPECIFY CONTACT FINISH

01 100µ" TIN/LEAD OVER NICKEL
14 10µ" GOLD OVER NICKEL
27 30µ" GOLD OVER NICKEL

PIN RECEPTACLES
for .022 - .032 diameter pins

0326

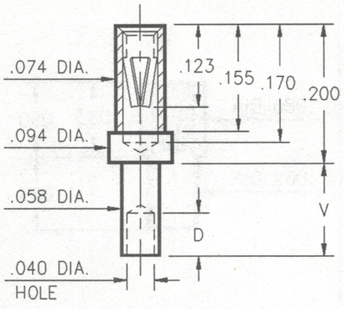
.074 DIA.
.094 DIA.
.058 DIA.
.040 DIA.
HOLE
.123
.155
.170
.200
V
D

Basic Part Number	Board Thick-ness	Length V	Depth D
0326-1	.031	.062	.040
0326-2	.062	.094	.062
0326-3	.094	.125	.062
0326-4	.125	.156	.062

0326-X-19-XX-06-XX-10-0

Swage mount in .060 hole

0298

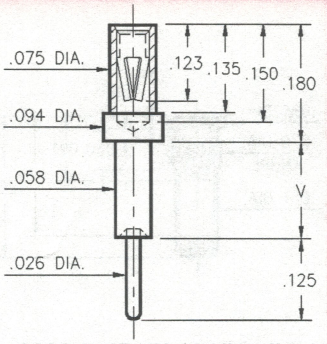
.075 DIA.
.094 DIA.
.058 DIA.
.026 DIA.
.123
.135
.150
.180
V
.125

Basic Part Number	Board Thick-ness	Length V
0298-1	.031	.051
0298-2	.062	.082
0298-3	.094	.113
0298-4	.125	.145

0298-X-15-XX-06-XX-10-0

Swage mount in .060 hole

0664

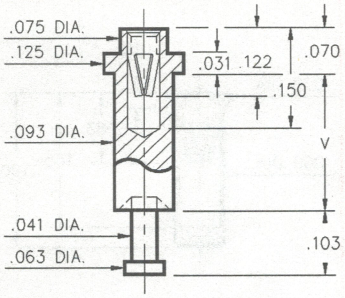
.075 DIA.
.125 DIA.
.093 DIA.
.041 DIA.
.063 DIA.
.031
.122
.070
.150
V
.103

Basic Part Number	Board Thick-ness	Length V
0664-1	.094	.125
0664-2	.125	.156
0664-3	.188	.219

0664-X-15-XX-06-XX-10-0

Swage mount in .096 hole

5295

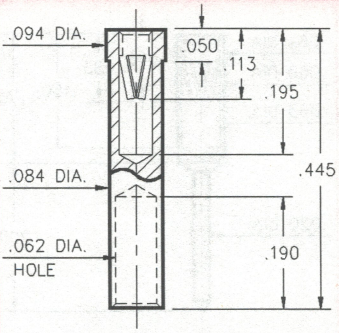
.094 DIA.
.084 DIA.
.062 DIA.
HOLE
.050
.113
.195
.445
.190

5295-0-19-XX-06-XX-10-0

Solder mount in .086 min. mounting hole

0396

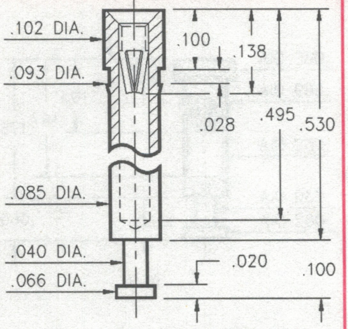
.102 DIA.
.093 DIA.
.085 DIA.
.040 DIA.
.066 DIA.
.100
.138
.028
.495
.530
.020
.100

0396-0-15-XX-06-XX-10-0

Press-fit in .090 mounting hole

9293

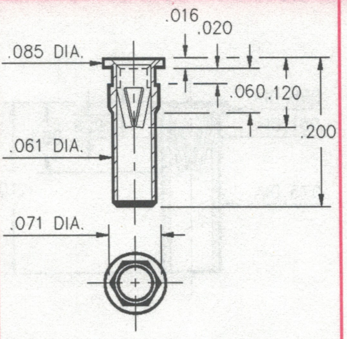
.016
.020
.085 DIA.
.060
.120
.200
.061 DIA.
.071 DIA.

9293-0-15-XX-06-XX-10-0

Hex press-fit in .067 plated thru hole

SPECIFICATIONS

SHELL MATERIAL:
Brass Alloy 360, 1/2 Hard
CONTACT MATERIAL:
Beryllium Copper Alloy 172, HT
DIMENSION IN INCHES
TOLERANCES ON:

LENGTHS:	± .005
DIAMETERS:	± .002
ANGLES:	± 2°

ORDER CODE: XXXX - X - 1X - XX - 06 - XX - X0 - 0

BASIC PART #

SPECIFY SHELL FINISH

01 200µ" TIN/LEAD OVER NICKEL
15 10µ" GOLD OVER NICKEL

CONTACT
# 06 CONTACT (DATA ON PAGE 159)

SPECIFY CONTACT FINISH

01 200µ" TIN/LEAD OVER NICKEL
14 10µ" GOLD OVER NICKEL
27 30µ" GOLD OVER NICKEL

PIN RECEPTACLES
for .022 - .034 diameter pins and .025 square pins

0291

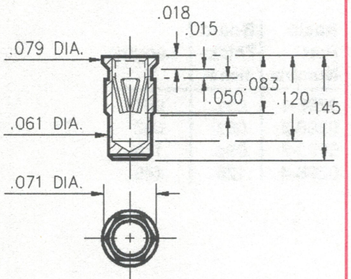
.018
.015
.079 DIA.
.050
.083
.120
.145
.061 DIA.
.071 DIA.

0291-0-15-XX-16-XX-10-0
Hex press-fit in .067
plated thru hole

0293

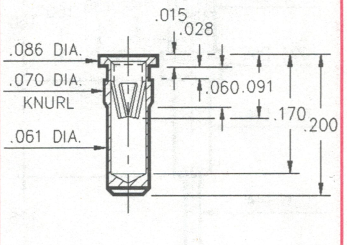
.015
.028
.086 DIA.
.070 DIA.
KNURL
.060
.091
.061 DIA.
.170
.200

0293-0-15-XX-16-XX-10-0
Press-fit in .067 mounting hole

0287

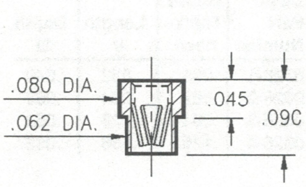
.080 DIA.
.062 DIA.
.045
.090

0287-0-15-XX-16-XX-10-0
Solder mount in .065 min.
mounting hole

0285

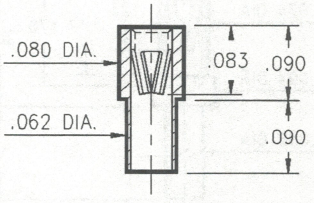
.080 DIA.
.083
.090
.062 DIA.
.090

0285-0-15-XX-16-XX-10-0
Solder mount in .065 min.
mounting hole

0284

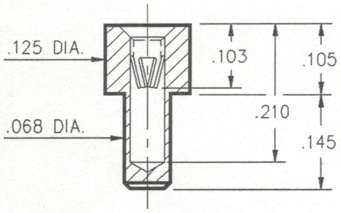
.125 DIA.
.103
.105
.210
.068 DIA.
.145

0284-0-15-XX-16-XX-10-0
Solder mount in .070 min.
mounting hole

8114

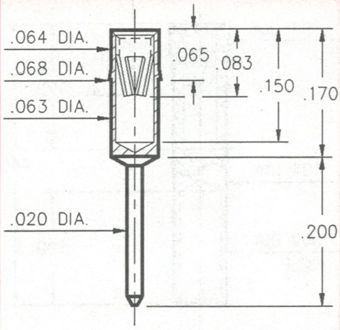
.064 DIA.
.065
.083
.068 DIA.
.150
.170
.063 DIA.
.020 DIA.
.200

8114-0-15-XX-16-XX-04-0
Press-fit from underside of pc board
into .065 mounting hole

0407

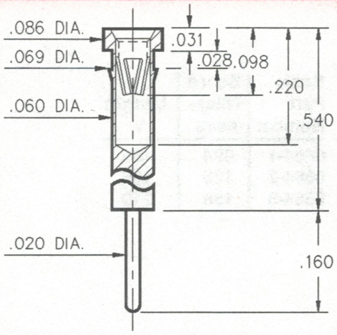
.086 DIA.
.031
.069 DIA.
.028
.098
.220
.060 DIA.
.540
.020 DIA.
.160

0407-0-15-XX-16-XX-04-0
Press-fit in .065 mounting hole

0415

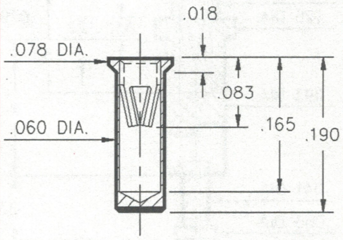
.018
.078 DIA.
.083
.060 DIA.
.165
.190

0415-0-15-XX-16-XX-10-0
Solder mount in .063 min.
mounting hole

0303

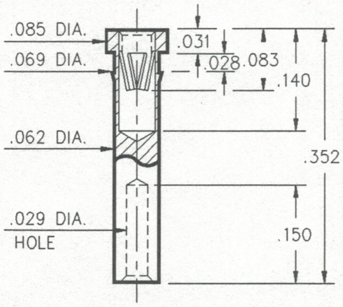
.085 DIA.
.031
.069 DIA.
.028
.083
.140
.062 DIA.
.352
.029 DIA.
HOLE
.150

0303-0-19-XX-16-XX-10-0
Wire Termination
Press-fit in .067 mounting hole

0306

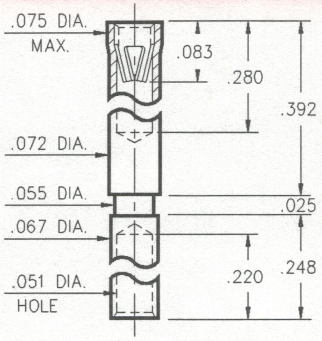
.075 DIA.
MAX.
.083
.280
.392
.072 DIA.
.055 DIA.
.025
.067 DIA.
.220
.248
.051 DIA.
HOLE

0306-0-19-XX-16-XX-10-0
Wire Termination
#18 gage crimp barrel

0273

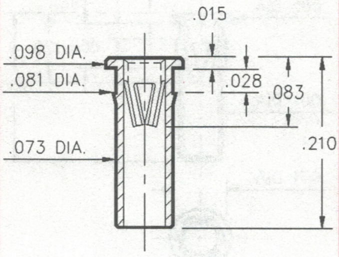
.015
.098 DIA.
.081 DIA.
.028
.083
.073 DIA.
.210

0273-0-15-XX-16-XX-10-0
Press-fit in .078 mounting hole

7520

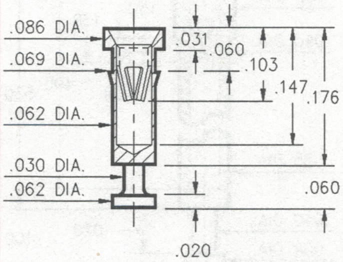
.086 DIA.
.031
.060
.069 DIA.
.103
.147
.176
.062 DIA.
.030 DIA.
.062 DIA.
.060
.020

7520-0-15-XX-16-XX-10-0
Press-fit in .066 mounting hole

SPECIFICATIONS

SHELL MATERIAL:
Brass Alloy 360, 1/2 Hard

CONTACT MATERIAL:
Beryllium Copper Alloy 172, HT

DIMENSION IN INCHES
TOLERANCES ON:
LENGTHS: ± .005
DIAMETERS: ± .002
ANGLES: ± 2°

ORDER CODE: XXXX - 0 - 1X - XX - 16 - XX - XX - 0

BASIC PART #

SPECIFY SHELL FINISH
01 200µ" TIN/LEAD OVER NICKEL
15 10µ" GOLD OVER NICKEL

CONTACT
# 16 CONTACT (DATA ON PAGE 160)

SPECIFY CONTACT FINISH
01 200µ" TIN/LEAD OVER NICKEL
14 10µ" GOLD OVER NICKEL
27 30µ" GOLD OVER NICKEL

PIN RECEPTACLES
for .022 - .034 diameter pins and .025 square pins

9101

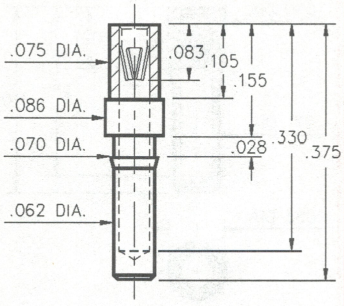
.075 DIA.
.086 DIA.
.070 DIA.
.062 DIA.
.083
.105
.155
.028
.330
.375

9101-0-15-XX-16-XX-10-0
Press-fit in .067 mounting hole

6021

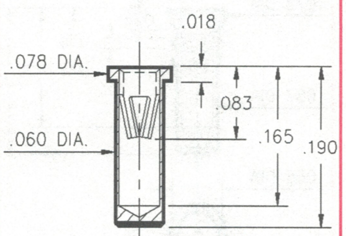
.078 DIA.
.060 DIA.
.018
.083
.165
.190

6021-0-15-XX-16-XX-10-0
Solder mount in .062 min. mounting hole

1873

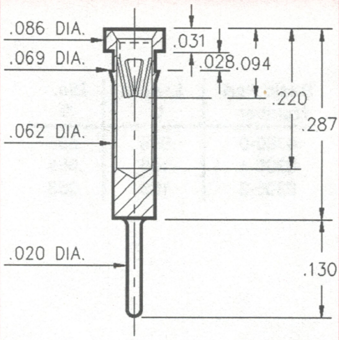
.086 DIA.
.069 DIA.
.062 DIA.
.020 DIA.
.031
.028
.094
.220
.287
.130

1873-0-15-XX-16-XX-04-0
Press-fit in .066 mounting hole

8679

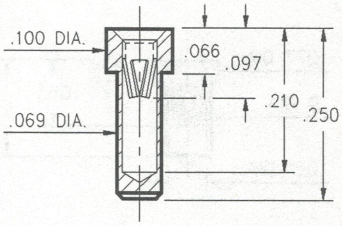
.100 DIA.
.069 DIA.
.066
.097
.210
.250

8679-0-15-XX-16-XX-10-0
Solder mount in .071 min. mounting hole

5650

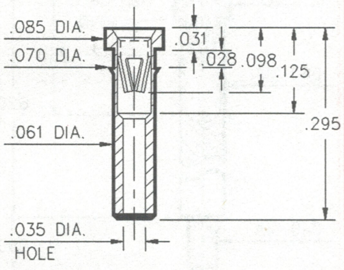
.085 DIA.
.070 DIA.
.061 DIA.
.035 DIA.
HOLE
.031
.028
.098
.125
.295

5650-0-19-XX-16-XX-10-0
Press-fit in .067 mounting hole

SPECIFICATIONS

SHELL MATERIAL:
Brass Alloy 360, 1/2 Hard

CONTACT MATERIAL:
Beryllium Copper Alloy 172, HT

DIMENSION IN INCHES
TOLERANCES ON:
LENGTHS: ± .005
DIAMETERS: ± .002
ANGLES: ± 2°

ORDER CODE: XXXX - 0 - 1X - XX - 16 - XX - XX - 0

BASIC PART #

SPECIFY SHELL FINISH
01 200µ" TIN/LEAD OVER NICKEL
15 10µ" GOLD OVER NICKEL

SPECIFY CONTACT FINISH
01 200µ" TIN/LEAD OVER NICKEL
14 10µ" GOLD OVER NICKEL
27 30µ" GOLD OVER NICKEL

CONTACT
# 16 CONTACT (DATA ON PAGE 160)

PIN RECEPTACLES
for .025 - .037 diameter pins and .025 square pins

0305

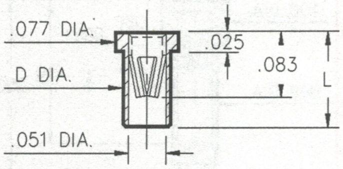

.077 DIA.
D DIA.
.051 DIA.
.025
.083
L

Basic Part Number	Length L	Dia. D
0305-0	.095	.056
0305-1	.105	.058
0305-2	.155	.058

0305-X-15-XX-47-XX-10-0

Solder mount in a .059/.061 mounting hole

0279

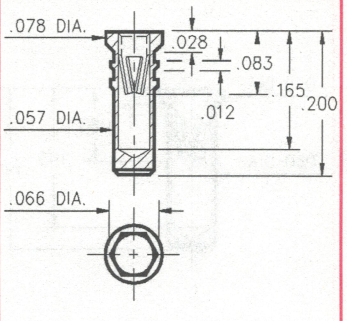

.078 DIA.
.028
.083
.165
.200
.012
.057 DIA.
.066 DIA.

0279-0-15-XX-47-XX-10-0

Hex press-fit in .061 plated hole

0330

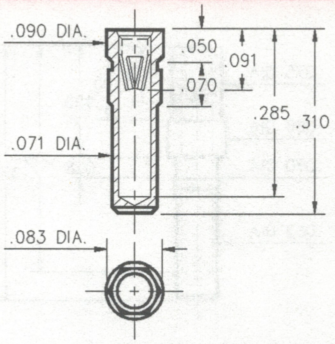

.090 DIA.
.050
.091
.070
.285
.310
.071 DIA.
.083 DIA.

0330-0-15-XX-47-XX-10-0

Hex press-fit in .076 plated hole

0300/8300

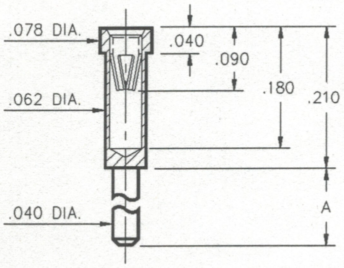

.078 DIA.
.040
.090
.180
.210
.062 DIA.
.040 DIA.
A

Basic Part Number	Length A
0300-1	.110
0300-2	.187
8300-0	.140

X300-X-15-XX-47-XX-04-0

Solder mount in .042 min. mounting hole

0301

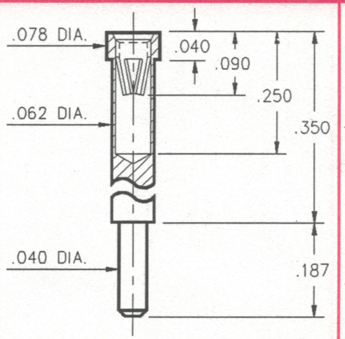

.078 DIA.
.040
.090
.250
.350
.062 DIA.
.040 DIA.
.187

0301-1-15-XX-47-XX-10-0

Solder mount in .042 min. mounting hole

0309

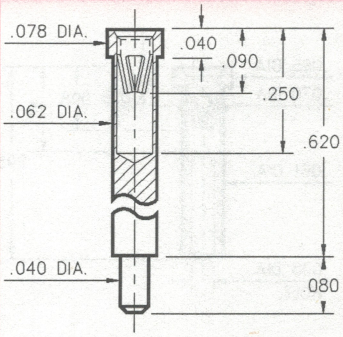

.078 DIA.
.040
.090
.250
.620
.062 DIA.
.040 DIA.
.080

0309-2-15-XX-47-XX-10-0

Solder mount in .042 min. mounting hole

1303

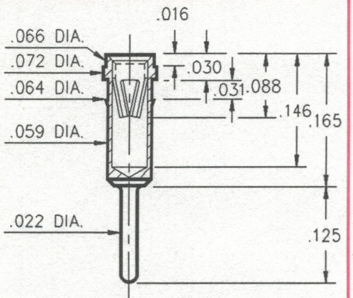

.016
.066 DIA.
.072 DIA.
.030
.064 DIA.
.031
.088
.146
.165
.059 DIA.
.022 DIA.
.125

1303-0-15-XX-47-XX-04-0

Press-fit in .061 mounting hole

1304

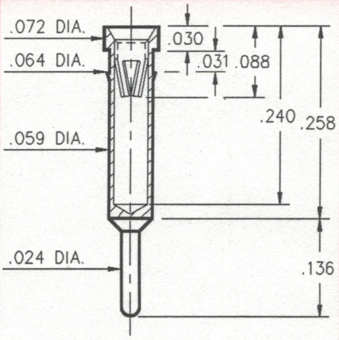

.072 DIA.
.030
.064 DIA.
.031
.088
.240
.258
.059 DIA.
.024 DIA.
.136

1304-0-15-XX-47-XX-04-0

Press-fit in .061 mounting hole

0399

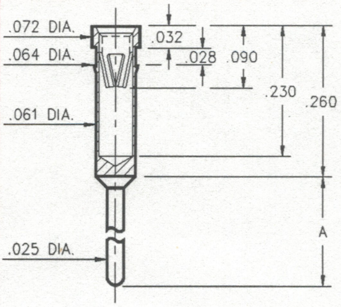

.072 DIA.
.032
.064 DIA.
.028
.090
.230
.260
.061 DIA.
A
.025 DIA.

Basic Part Number	Length A
0399-0	.230
0399-1	.180

0399-X-15-XX-47-XX-04-0

Press-fit in .061mounting hole

SPECIFICATIONS

SHELL MATERIAL:
Brass Alloy 360, 1/2 Hard

CONTACT MATERIAL:
Beryllium Copper Alloy 172, HT

DIMENSION IN INCHES
TOLERANCES ON:

LENGTHS:	± .005
DIAMETERS:	± .002
ANGLES:	± 2°

ORDER CODE: XXXX - X - 15 - XX - 47 - XX - XX - 0

BASIC PART #

SPECIFY SHELL FINISH

01 200µ" TIN/LEAD OVER NICKEL
15 10µ" GOLD OVER NICKEL

SPECIFY CONTACT FINISH

01 200µ" TIN/LEAD OVER NICKEL
14 10µ" GOLD OVER NICKEL
27 30µ" GOLD OVER NICKEL

CONTACT
# 47 CONTACT (DATA ON PAGE 160)

PIN RECEPTACLES
for .025 - .037 diameter pins
and .025 square pins

1305

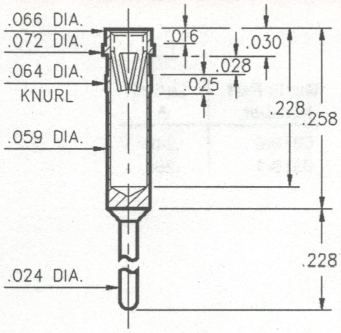
.066 DIA.
.072 DIA.
.064 DIA.
KNURL
.059 DIA.
.024 DIA.
.016
.030
.028
.025
.228
.258
.228

1305-0-15-XX-47-XX-04-0

Press-fit in .061 mounting hole

1306

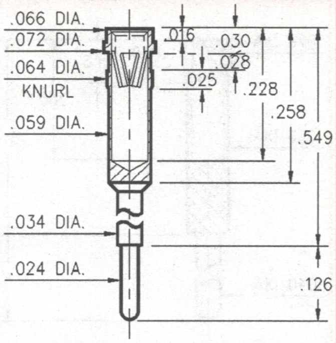
.066 DIA.
.072 DIA.
.064 DIA.
KNURL
.059 DIA.
.034 DIA.
.024 DIA.
.016
.030
.028
.025
.228
.258
.549
.126

1306-0-15-XX-47-XX-04-0

Press-fit in .061 mounting hole

0401

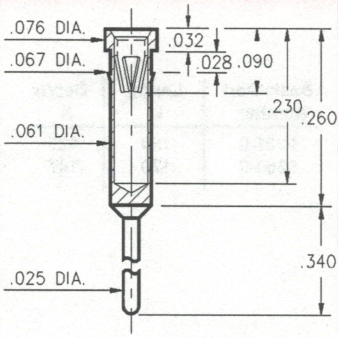
.076 DIA.
.067 DIA.
.061 DIA.
.025 DIA.
.032
.028
.090
.230
.260
.340

0401-0-15-XX-47-XX-04-0

Press-fit in .064 mounting hole

0400

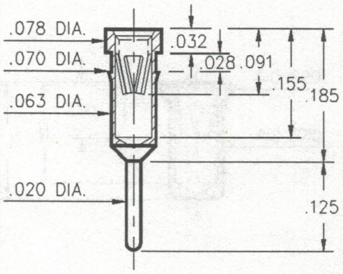
.078 DIA.
.070 DIA.
.063 DIA.
.020 DIA.
.032
.028
.091
.155
.185
.125

0400-0-15-XX-47-XX-04-0

Press-fit in .067 mounting hole

0335

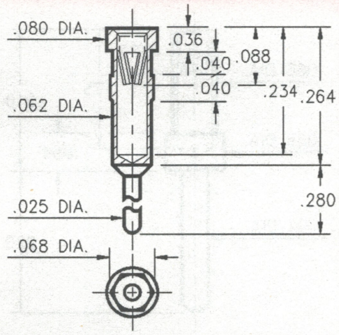
.080 DIA.
.062 DIA.
.025 DIA.
.068 DIA.
.036
.040
.088
.040
.234
.264
.280

0335-0-15-XX-47-XX-04-0

Hex press-fit in .063 plated thru hole

4614

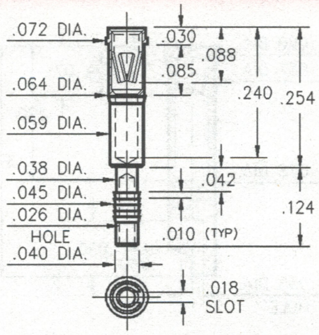
.072 DIA.
.064 DIA.
.059 DIA.
.038 DIA.
.045 DIA.
.026 DIA.
HOLE
.040 DIA.
.030
.088
.085
.240
.254
.042
.124
.010 (TYP)
.018
SLOT

4614-0-31-XX-47-XX-04-0

Compliant press-fit in .040±.003 plated hole. For .060→ .100 thick board.

4615

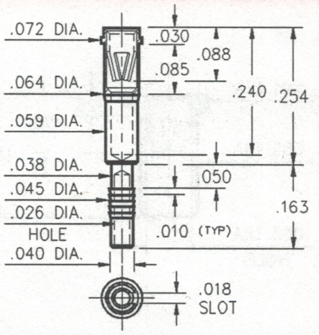
.072 DIA.
.064 DIA.
.059 DIA.
.038 DIA.
.045 DIA.
.026 DIA.
HOLE
.040 DIA.
.030
.088
.085
.240
.254
.050
.163
.010 (TYP)
.018
SLOT

4615-0-31-XX-47-XX-04-0

Compliant press-fit in .040±.003 plated hole. For .090→ .130 thick board.

7614

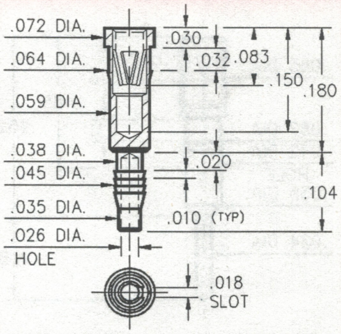
.072 DIA.
.064 DIA.
.059 DIA.
.038 DIA.
.045 DIA.
.035 DIA.
.026 DIA.
HOLE
.030
.032
.083
.150
.180
.020
.104
.010 (TYP)
.018
SLOT

7614-0-31-XX-47-XX-04-0

Compliant press-fit in .040±.003 plated hole. For .060→ .100 thick board.

8401

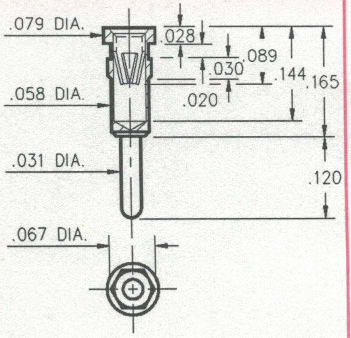
.079 DIA.
.058 DIA.
.031 DIA.
.067 DIA.
.028
.030
.089
.020
.144
.165
.120

8401-0-15-XX-47-XX-04-0

Hex press-fit in .063 plated thru hole

2400

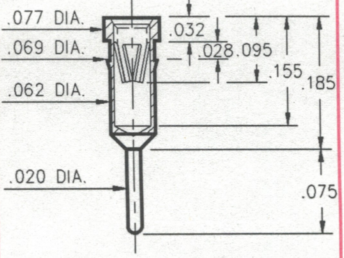
.077 DIA.
.069 DIA.
.062 DIA.
.020 DIA.
.032
.028
.095
.155
.185
.075

2400-0-15-XX-47-XX-04-0

Press-fit in .066 mounting hole

6857

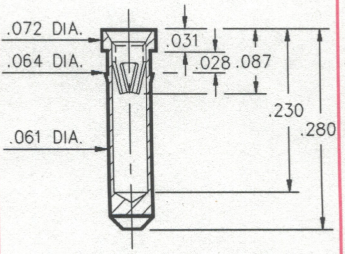
.072 DIA.
.064 DIA.
.061 DIA.
.031
.028
.087
.230
.280

6857-0-15-XX-47-XX-10-0

Press-fit in .061 mounting hole

9393

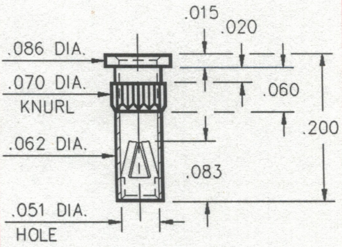
.015
.020
.086 DIA.
.070 DIA.
KNURL
.062 DIA.
.051 DIA.
HOLE
.060
.200
.083

9393-0-15-XX-47-XX-10-0

Press-fit in .067 mounting hole

SPECIFICATIONS

SHELL MATERIAL:
Brass Alloy 360, 1/2 Hard

CONTACT MATERIAL:
Beryllium Copper Alloy 172, HT

DIMENSION IN INCHES

TOLERANCES ON:
LENGTHS: ± .005
DIAMETERS: ± .002
ANGLES: ± 2°

ORDER CODE: XXXX - 0 - XX - XX - 47 - XX - XX - 0

BASIC PART #

SPECIFY SHELL FINISH
01 200µ" TIN/LEAD OVER NICKEL
15 10µ" GOLD OVER NICKEL

CONTACT
# 47 CONTACT (DATA ON PAGE 160)

SPECIFY CONTACT FINISH
01 200µ" TIN/LEAD OVER NICKEL
14 10µ" GOLD OVER NICKEL
27 30µ" GOLD OVER NICKEL

PIN RECEPTACLES
for .037 - .043 diameter pins

0331/9353

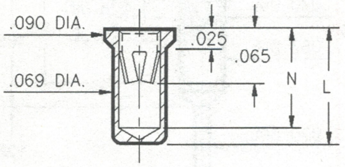

.090 DIA.
.069 DIA.
.025
.065
N
L

Basic Part Number	Length L	Depth N
0331-0	.150	.127
9353-0	.170	.147

X3XX-X-15-XX-18-XX-10-0

Solder mount in .071 min.
mounting hole

0319

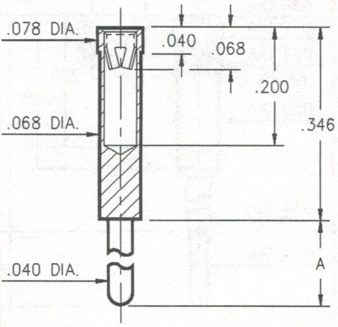

.078 DIA.
.040
.068
.200
.346
.068 DIA.
.040 DIA.
A

Basic Part Number	Length A
0319-0	.240
0319-1	.280

0319-X-15-XX-18-XX-04-0

Solder mount in .042 min.
mounting hole

1313

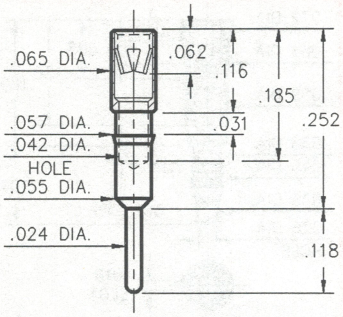

.065 DIA.
.062
.116
.185
.252
.057 DIA.
.042 DIA.
HOLE
.055 DIA.
.031
.024 DIA.
.118

1313-0-15-XX-18-XX-04-0

Press-fit in .056 mounting hole

9354

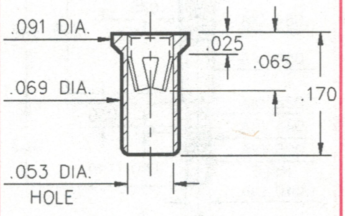

.091 DIA.
.025
.065
.170
.069 DIA.
.053 DIA.
HOLE

9354-0-15-XX-18-XX-10-0

Solder mount in .072 min.
mounting hole

7405

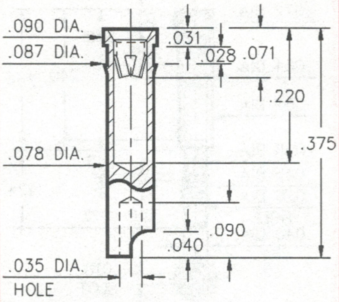

.090 DIA.
.087 DIA.
.031
.028
.071
.220
.375
.078 DIA.
.090
.040
.035 DIA.
HOLE

7405-0-18-XX-18-XX-10-0

Press-fit in .084 mounting hole

3450

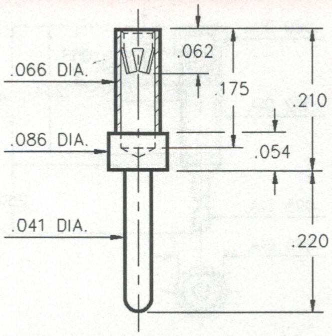

.066 DIA.
.062
.175
.210
.086 DIA.
.054
.041 DIA.
.220

3450-0-15-XX-18-XX-04-0

Solder mount in .043 min.
mounting hole

SPECIFICATIONS

SHELL MATERIAL:
Brass Alloy 360, 1/2 Hard

CONTACT MATERIAL:
Beryllium Copper Alloy 172, HT

DIMENSION IN INCHES

TOLERANCES ON:

LENGTHS:	± .005
DIAMETERS:	± .002
ANGLES:	± 2°

ORDER CODE: XXXX - X - 1X - XX - 18 - XX - XX - 0

BASIC PART #

SPECIFY SHELL FINISH

01 200µ" TIN/LEAD OVER NICKEL
15 10µ" GOLD OVER NICKEL

SPECIFY CONTACT FINISH

01 200µ" TIN/LEAD OVER NICKEL
14 10µ" GOLD OVER NICKEL
27 30µ" GOLD OVER NICKEL

CONTACT
# 18 CONTACT (DATA ON PAGE 161)

PIN RECEPTACLES
for .032 - .047 diameter pins

0344

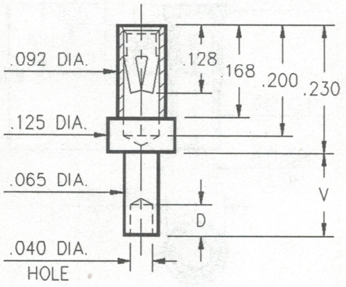

.092 DIA.
.125 DIA.
.065 DIA.
.040 DIA.
HOLE
.128
.168
.200
.230
V
D

Basic Part Number	Board Thick-ness	Length V	Depth D
0344-1	.031	.062	.040
0344-2	.062	.094	.062
0344-3	.094	.125	.062
0344-4	.125	.156	.062

0344-X-19-XX-34-XX-10-0

Swage mount in .067 hole

0349

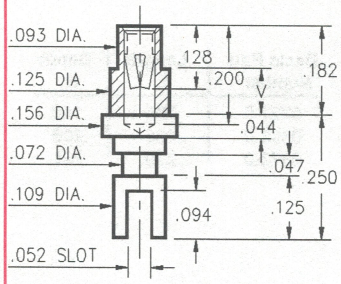

.093 DIA.
.125 DIA.
.156 DIA.
.072 DIA.
.109 DIA.
.052 SLOT
.128
.200
V
.182
.044
.047
.250
.094
.125

Basic Part Number	Board Thick-ness	Length V
0349-2	.062	.094
0349-3	.094	.125
0349-4	.125	.156

0349-X-31-XX-34-XX-10-0

Swage mount in .129 hole

0323/0324

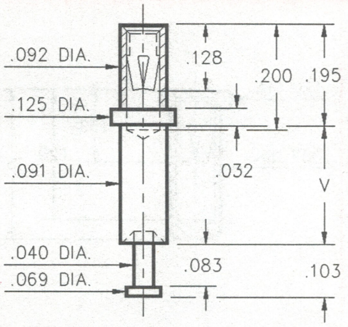

.092 DIA.
.125 DIA.
.091 DIA.
.040 DIA.
.069 DIA.
.128
.200
.195
.032
V
.083
.103

0323-X-15-XX-34-XX-10-0

Swage mount in .094 hole

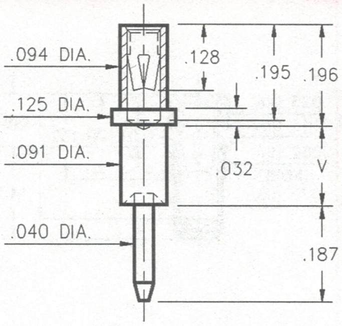

.094 DIA.
.125 DIA.
.091 DIA.
.040 DIA.
.128
.195
.196
.032
V
.187

Basic Part Number	Board Thick-ness	Length V
032X-1	.031	.062
032X-2	.062	.094
032X-3	.094	.125
032X-4	.125	.156
032X-5	.188	.219

0324-X-15-XX-34-XX-10-0

Swage mount in .094 hole

0348

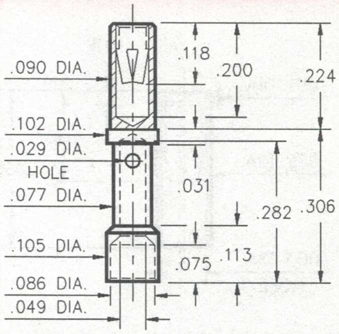

.090 DIA.
.102 DIA.
.029 DIA.
HOLE
.077 DIA.
.105 DIA.
.086 DIA.
.049 DIA.
.118
.200
.224
.031
.282
.306
.075
.113

0348-0-33-XX-34-XX-10-0

#20A Crimp Barrel

0405

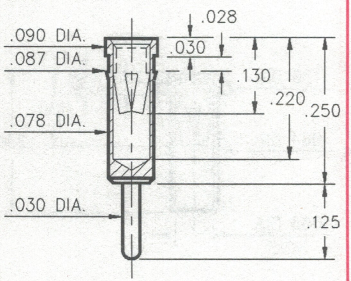

.090 DIA.
.087 DIA.
.078 DIA.
.030 DIA.
.028
.030
.130
.220
.250
.125

0405-0-15-XX-34-XX-04-0

Press-fit in .082 mounting hole

0336

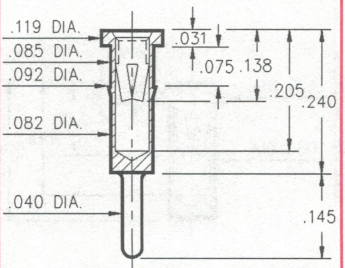

.119 DIA.
.085 DIA.
.092 DIA.
.082 DIA.
.040 DIA.
.031
.075
.138
.205
.240
.145

0336-0-15-XX-34-XX-04-0

Press-fit in .089 mounting hole

0322

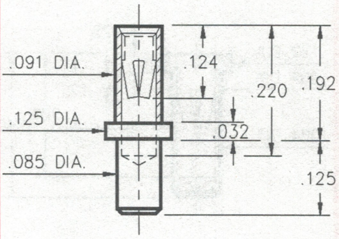

.091 DIA.
.125 DIA.
.085 DIA.
.124
.220
.192
.032
.125

0322-0-15-XX-34-XX-10-0

Solder mount in .089 min.
mounting hole

0325

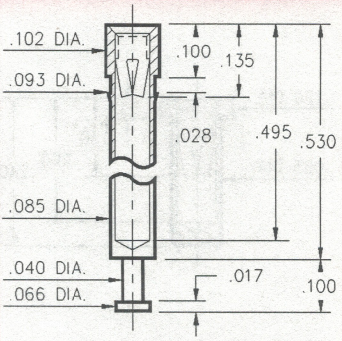

.102 DIA.
.093 DIA.
.085 DIA.
.040 DIA.
.066 DIA.
.100
.135
.028
.495
.530
.017
.100

0325-0-15-XX-34-XX-10-0

Press-fit in .089 mounting hole

SPECIFICATIONS

SHELL MATERIAL:
Brass Alloy 360, 1/2 Hard

CONTACT MATERIAL:
Beryllium Copper Alloy 172, HT

DIMENSION IN INCHES
TOLERANCES ON:

LENGTHS:	± .005
DIAMETERS:	± .002
ANGLES:	± 2°

ORDER CODE: XXXX - X - XX - XX - 34 - XX - XX - 0

BASIC PART #

SPECIFY SHELL FINISH
01 200μ" TIN/LEAD OVER NICKEL
15 10μ" GOLD OVER NICKEL

CONTACT
# 34 CONTACT (DATA ON PAGE 161)

SPECIFY CONTACT FINISH
01 200μ" TIN/LEAD OVER NICKEL
14 10μ" GOLD OVER NICKEL
27 30μ" GOLD OVER NICKEL

PIN RECEPTACLES
for .032 - .047 diameter pins

0327/0351/0373

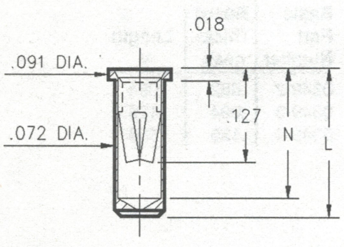
.018
.091 DIA.
.127
.072 DIA.
N
L

Basic Part Number	Length L	Depth N
0327-0	.206	.180
0351-0	.226	.200
0373-0	.270	.241

03XX-0-15-XX-34-XX-10-0

Solder mount in .075 min. mounting hole

0328

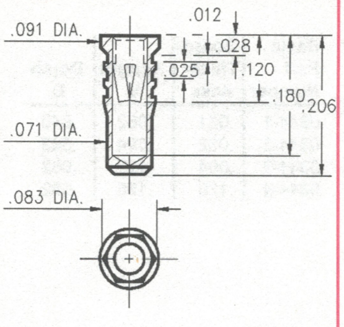
.091 DIA.
.012
.028
.025
.120
.180
.206
.071 DIA.
.083 DIA.

0328-0-15-XX-34-XX-10-0

Hex press-fit in .076 plated thru hole

0334

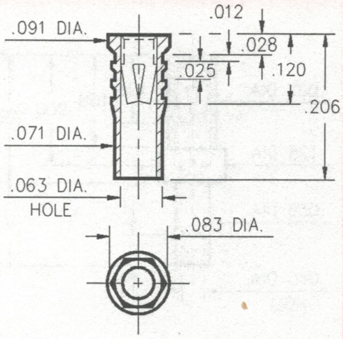
.091 DIA.
.012
.028
.025
.120
.206
.071 DIA.
.063 DIA.
HOLE
.083 DIA.

0334-0-15-XX-34-XX-10-0

Hex press-fit in .076 plated thru hole

0312

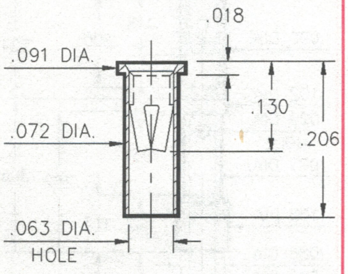
.018
.091 DIA.
.130
.206
.072 DIA.
.063 DIA.
HOLE

0312-0-15-XX-34-XX-10-0

Solder mount in .075 min. mounting hole

0333

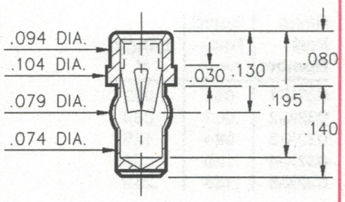
.094 DIA.
.104 DIA.
.079 DIA.
.074 DIA.
.030
.130
.080
.195
.140

0333-0-42-XX-34-XX-10-0

Press-fit in .076 mounting hole

0357

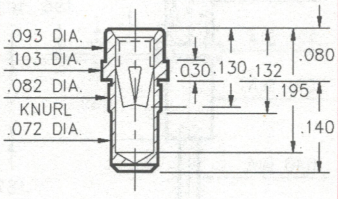
.093 DIA.
.103 DIA.
.082 DIA.
KNURL
.072 DIA.
.030
.130
.132
.080
.195
.140

0357-0-15-XX-34-XX-10-0

Press-fit in .078 mounting hole

0317

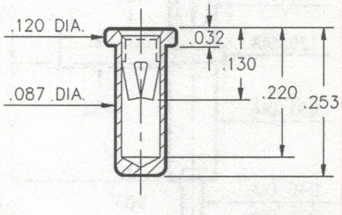
.120 DIA.
.032
.130
.087 DIA.
.220
.253

0317-0-15-XX-34-XX-10-0

Solder mount in .091 min. mounting hole

0340

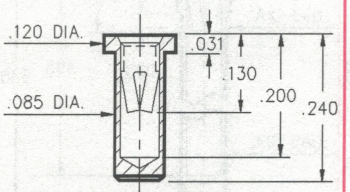
.120 DIA.
.031
.130
.085 DIA.
.200
.240

0340-0-15-XX-34-XX-10-0

Solder mount in .087 min. mounting hole

0345

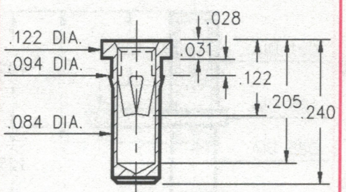
.028
.122 DIA.
.031
.094 DIA.
.122
.205
.240
.084 DIA.

0345-0-15-XX-34-XX-10-0

Press-fit in .089 mounting hole

0316

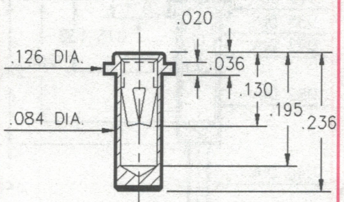
.020
.126 DIA.
.036
.130
.195
.236
.084 DIA.

0316-0-15-XX-34-XX-10-0

Solder mount in .087 min. mounting hole

0314

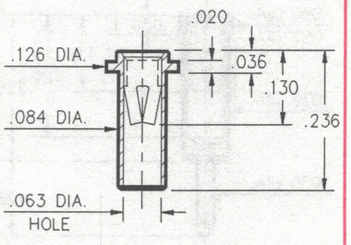
.020
.126 DIA.
.036
.130
.236
.084 DIA.
.063 DIA.
HOLE

0314-0-15-XX-34-XX-10-0

Solder mount in .087 min. mounting hole

SPECIFICATIONS

SHELL MATERIAL:
Brass Alloy 360, 1/2 Hard

CONTACT MATERIAL:
Beryllium Copper Alloy 172, HT

DIMENSION IN INCHES
TOLERANCES ON:

LENGTHS:	± .005
DIAMETERS:	± .002
ANGLES:	± 2°

ORDER CODE: XXXX - X - XX - XX - 34 - XX - 10 - 0

BASIC PART #

SPECIFY SHELL FINISH

01 200µ" TIN/LEAD OVER NICKEL
15 10µ" GOLD OVER NICKEL

CONTACT
# 34 CONTACT (DATA ON PAGE 161)

SPECIFY CONTACT FINISH

01 200µ" TIN/LEAD OVER NICKEL
14 10µ" GOLD OVER NICKEL
27 30µ" GOLD OVER NICKEL

PIN RECEPTACLES
for .032 - .047 diameter pins

0359

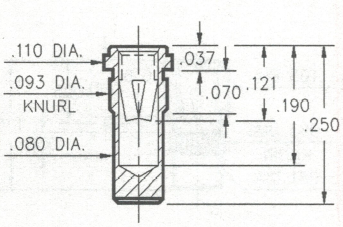
.110 DIA.
.093 DIA.
KNURL
.080 DIA.
.037
.070
.121
.190
.250

0359-0-15-XX-34-XX-10-0

Press-fit in .089 mounting hole

0358

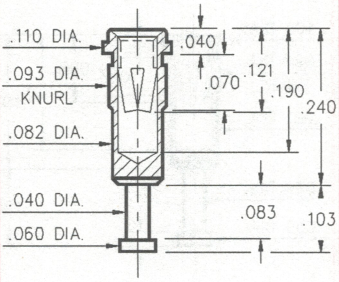
.110 DIA.
.093 DIA.
KNURL
.082 DIA.
.040 DIA.
.060 DIA.
.040
.070
.121
.190
.240
.083
.103

0358-0-15-XX-34-XX-10-0

Press-fit in .089 mounting hole

0360

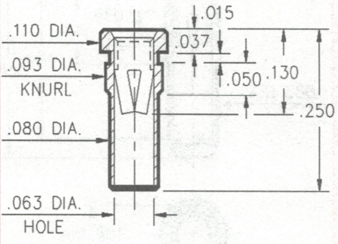
.110 DIA.
.093 DIA.
KNURL
.080 DIA.
.063 DIA.
HOLE
.015
.037
.050
.130
.250

0360-0-15-XX-34-XX-10-0

Press-fit in .089 mounting hole

0343

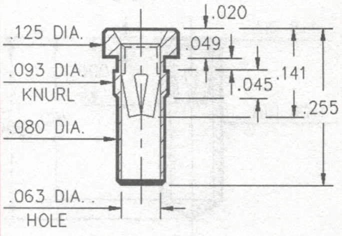
.125 DIA.
.093 DIA.
KNURL
.080 DIA.
.063 DIA.
HOLE
.020
.049
.045
.141
.255

0343-0-15-XX-34-XX-10-0

Press-fit in .089 mounting hole

0356

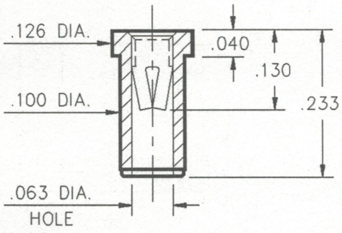
.126 DIA.
.100 DIA.
.063 DIA.
HOLE
.040
.130
.233

0356-0-15-XX-34-XX-10-0

Solder mount in .102 min. mounting hole

6659

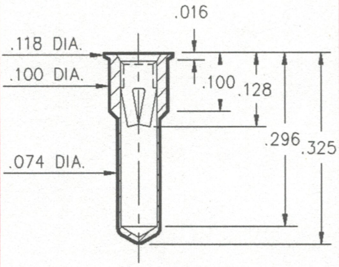
.016
.118 DIA.
.100 DIA.
.074 DIA.
.100
.128
.296
.325

6659-0-15-XX-34-XX-10-0

Solder mount in .102 min. mounting hole

0347

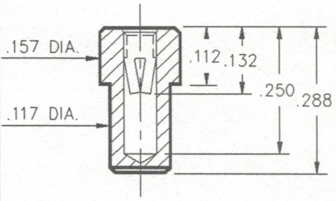
.157 DIA.
.117 DIA.
.112
.132
.250
.288

0347-0-15-XX-34-XX-10-0

Solder mount in .120 min. mounting hole

0329

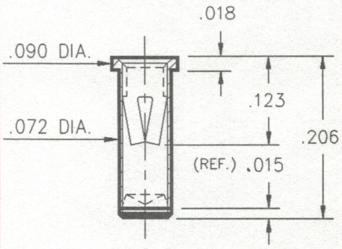
.018
.090 DIA.
.072 DIA.
.123
.206
(REF.) .015

0329-0-15-XX-34-XX-10-0

Solder mount in .075 min. mounting hole. "knock-out" bottom.

0814

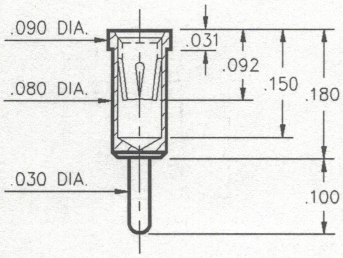
.090 DIA.
.080 DIA.
.030 DIA.
.031
.092
.150
.180
.100

0814-0-15-XX-34-XX-04-0

Solder mount in .082 min. mounting hole

5059

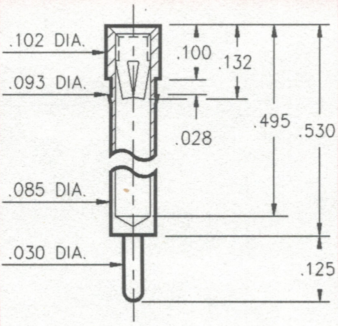
.102 DIA.
.093 DIA.
.085 DIA.
.030 DIA.
.100
.132
.028
.495
.530
.125

5059-0-15-XX-34-XX-04-0

Press-fit in .089 mounting hole

8360

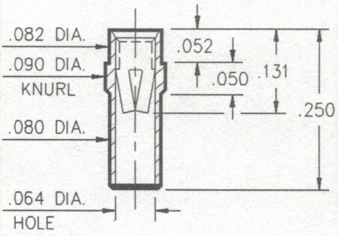
.082 DIA.
.090 DIA.
KNURL
.080 DIA.
.064 DIA.
HOLE
.052
.050
.131
.250

8360-0-15-XX-34-XX-10-0

Press-fit in .086 mounting hole

9359

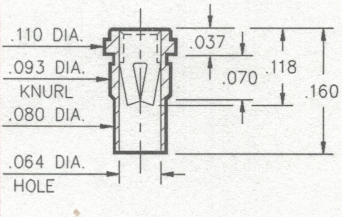
.110 DIA.
.093 DIA.
KNURL
.080 DIA.
.064 DIA.
HOLE
.037
.070
.118
.160

9359-0-15-XX-34-XX-10-0

Press-fit in .089 mounting hole

SPECIFICATIONS

SHELL MATERIAL:
Brass Alloy 360, 1/2 Hard

CONTACT MATERIAL:
Beryllium Copper Alloy 172, HT

DIMENSION IN INCHES
TOLERANCES ON:
LENGTHS: ± .005
DIAMETERS: ± .002
ANGLES: ± 2°

ORDER CODE: XXXX - 0 - 15 - XX - 34 - XX - XX - 0

BASIC PART #

SPECIFY SHELL FINISH
01 200µ" TIN/LEAD OVER NICKEL
15 10µ" GOLD OVER NICKEL

CONTACT
# 34 CONTACT (DATA ON PAGE 161)

SPECIFY CONTACT FINISH
01 200µ" TIN/LEAD OVER NICKEL
14 10µ" GOLD OVER NICKEL
27 30µ" GOLD OVER NICKEL

PIN RECEPTACLES
for .040 - .050 diameter pins

0355

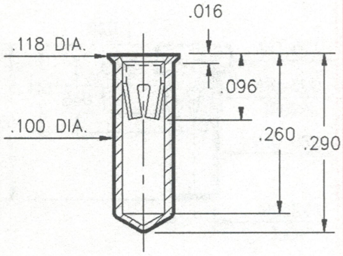

.016
.118 DIA.
.096
.100 DIA.
.260
.290

0355-0-15-XX-02-XX-10-0
Solder mount in .102 min. mounting hole

0354

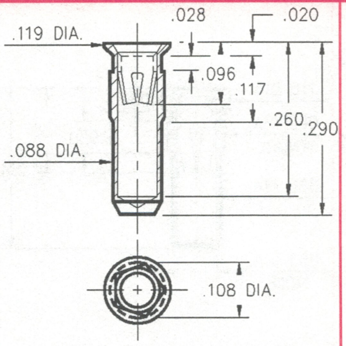

.028
.020
.119 DIA.
.096
.117
.260
.290
.088 DIA.
.108 DIA.

0354-0-15-XX-02-XX-10-0
Pentagonal press-fit in .103 plated thru hole

3490

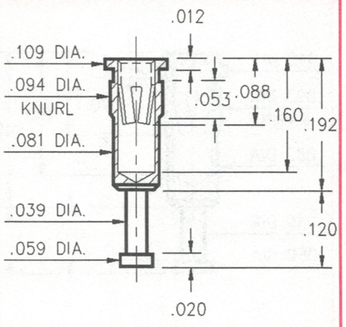

.012
.109 DIA.
.094 DIA.
KNURL
.053
.088
.160
.192
.081 DIA.
.039 DIA.
.120
.059 DIA.
.020

3490-0-15-XX-02-XX-10-0
Press-fit in .091 mounting hole

3808

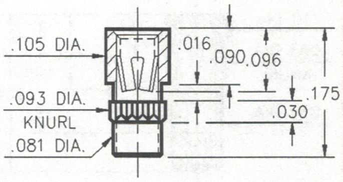

.105 DIA.
.016
.090
.096
.093 DIA.
.175
KNURL
.030
.081 DIA.

3808-0-15-XX-02-XX-10-0
Press-fit in .090 mounting hole

SPECIFICATIONS

SHELL MATERIAL:
Brass Alloy 360, 1/2 Hard
CONTACT MATERIAL:
Beryllium Copper Alloy 172, HT
DIMENSION IN INCHES
TOLERANCES ON:
LENGTHS: ± .005
DIAMETERS: ± .002
ANGLES: ± 2°

ORDER CODE: XXXX - 0 - 15 - XX - 02 - XX - 10 - 0

BASIC PART #

SPECIFY SHELL FINISH
01 200µ" TIN/LEAD OVER NICKEL
15 10µ" GOLD OVER NICKEL

CONTACT
# 02 CONTACT (DATA ON PAGE 162)

SPECIFY CONTACT FINISH
01 200µ" TIN/LEAD OVER NICKEL
14 10µ" GOLD OVER NICKEL
27 30µ" GOLD OVER NICKEL

PIN RECEPTACLES
for .040 - .060 diameter pins

0433/8433

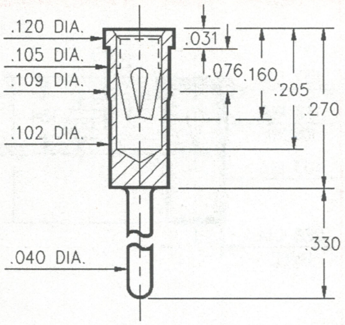

.120 DIA.
.105 DIA.
.109 DIA.
.102 DIA.
.040 DIA.
.031
.076
.160
.205
.270
.330

Basic Part Number	Length A
0433-0 8433-0	.120 .330

X433-0-15-XX-03-XX-04-0

Press-fit in .106 mounting hole

0435/0436

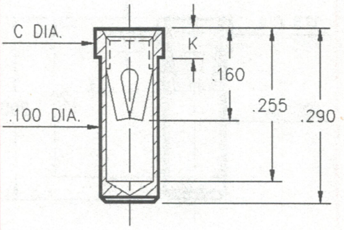

C DIA.
.100 DIA.
K
.160
.255
.290

Basic Part Number	Dia. C	Length K
0435-0 0436-0	.118 .125	.050 .070

043X-0-15-XX-03-XX-10-0

Solder mount in .102 min. mounting hole

0434

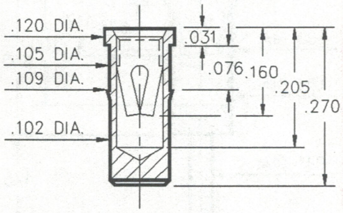

.120 DIA.
.105 DIA.
.109 DIA.
.102 DIA.
.031
.076
.160
.205
.270

0434-0-15-XX-03-XX-10-0

Press-fit in .106 mounting hole

SPECIFICATIONS

SHELL MATERIAL:
Brass Alloy 360, 1/2 Hard

CONTACT MATERIAL:
Beryllium Copper Alloy 172, HT

DIMENSION IN INCHES
TOLERANCES ON:
LENGTHS: ± .005
DIAMETERS: ± .002
ANGLES: ± 2°

ORDER CODE: XXXX - 0 - 15 - XX - 03 - XX - XX - 0

BASIC PART #

SPECIFY SHELL FINISH

01 200µ" TIN/LEAD OVER NICKEL
15 10µ" GOLD OVER NICKEL

SPECIFY CONTACT FINISH

01 200µ" TIN/LEAD OVER NICKEL
14 10µ" GOLD OVER NICKEL
27 30µ" GOLD OVER NICKEL

CONTACT
# 03 CONTACT (DATA ON PAGE 162)

PIN RECEPTACLES
for .048 - .064 diameter pins (#13 contact) and .045 - .067 diameter pins (#23 contact)

0364

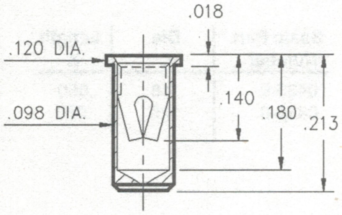
.018
.120 DIA.
.098 DIA.
.140
.180
.213

0364-0-15-XX-13-XX-10-0

Solder mount in .100 min. mounting hole

0363

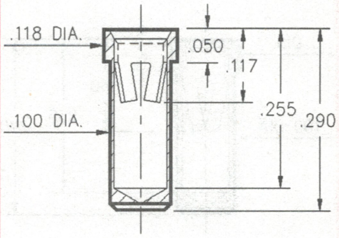
.118 DIA.
.050
.117
.100 DIA.
.255
.290

0363-0-15-XX-23-XX-10-0

Solder mount in .102 min. mounting hole

0365

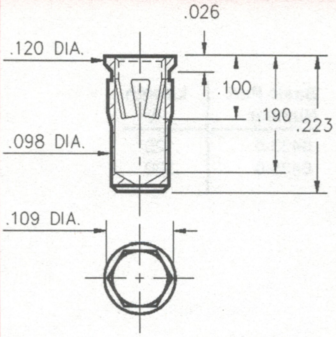
.026
.120 DIA.
.100
.190
.223
.098 DIA.
.109 DIA.

0365-0-15-XX-23-XX-10-0

Hex press-fit in .104 plated thru hole

0366

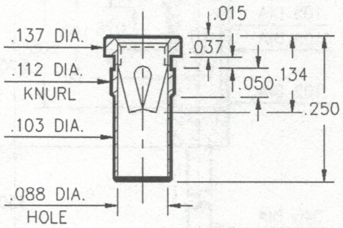
.015
.137 DIA.
.037
.112 DIA.
KNURL
.050
.134
.250
.103 DIA.
.088 DIA.
HOLE

0366-0-15-XX-13-XX-10-0

Press-fit in .108 mounting hole

0372

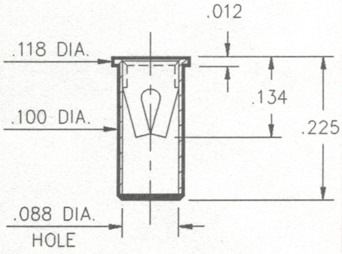
.012
.118 DIA.
.134
.100 DIA.
.225
.088 DIA.
HOLE

0372-0-15-XX-13-XX-10-0

Solder mount in .102 min. mounting hole

0362

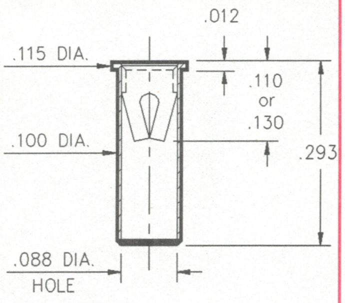
.012
.115 DIA.
.110
or
.130
.100 DIA.
.293
.088 DIA.
HOLE

0362-0-15-XX-X3-XX-10-0

Solder mount in .102 min. mounting hole

0367

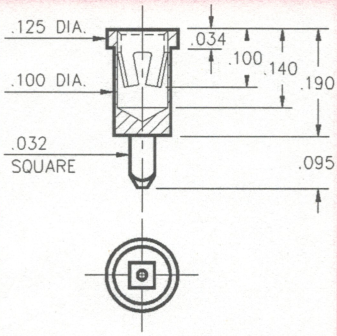
.125 DIA.
.034
.100
.140
.190
.100 DIA.
.032
SQUARE
.095

0367-0-15-XX-23-XX-10-0

Square press-fit in .040 plated thru hole

9324

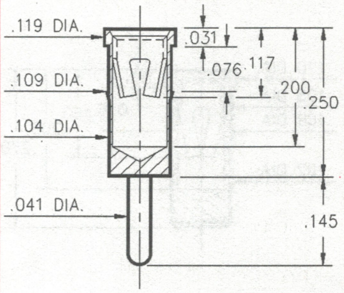
.119 DIA.
.031
.076
.117
.109 DIA.
.200
.250
.104 DIA.
.041 DIA.
.145

9324-0-15-XX-23-XX-04-0

Press-fit in .106 mounting hole

0492

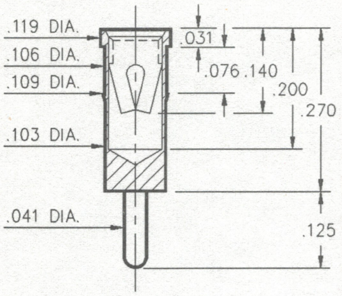
.119 DIA.
.031
.106 DIA.
.076
.140
.109 DIA.
.200
.270
.103 DIA.
.041 DIA.
.125

0492-0-15-XX-13-XX-04-0

Press-fit in .106 mounting hole

0381

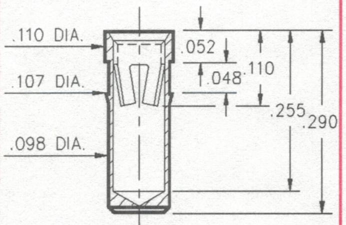
.110 DIA.
.052
.107 DIA.
.048
.110
.255
.290
.098 DIA.

0381-0-15-XX-23-XX-10-0

Press-fit in .104 mounting hole

4034

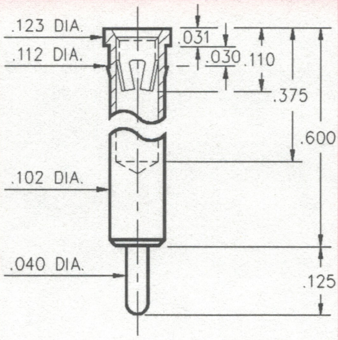
.123 DIA.
.031
.112 DIA.
.030
.110
.375
.600
.102 DIA.
.040 DIA.
.125

4034-0-15-XX-23-XX-04-0

Press-fit in .109 mounting hole

3044

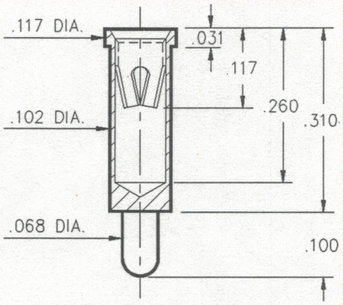
.117 DIA.
.031
.117
.260
.310
.102 DIA.
.068 DIA.
.100

3044-0-15-XX-23-XX-04-0

Solder mount in .104 min. mounting hole

SPECIFICATIONS

SHELL MATERIAL:
Brass Alloy 360, 1/2 Hard

CONTACT MATERIAL:
Beryllium Copper Alloy 172, HT

DIMENSION IN INCHES
TOLERANCES ON:

LENGTHS:	± .005
DIAMETERS:	± .002
ANGLES:	± 2°

ORDER CODE: XXXX - 0 - 15 - XX - X3 - XX - XX - 0

BASIC PART #

SPECIFY SHELL FINISH

01 200μ" TIN/LEAD OVER NICKEL
15 10μ" GOLD OVER NICKEL

SELECT CONTACT
# 13 OR **# 23** CONTACT (DATA ON PAGE 163)

SPECIFY CONTACT FINISH

01 200μ" TIN/LEAD OVER NICKEL
14 10μ" GOLD OVER NICKEL
27 30μ" GOLD OVER NICKEL

PIN RECEPTACLES
for .048 - .064 diameter pins (#13 contact) and .045 - .067 diameter pins (#23 contact)

0496

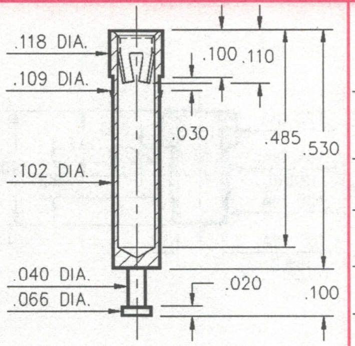
.118 DIA.
.109 DIA.
.100
.110
.030
.485
.530
.102 DIA.
.040 DIA.
.066 DIA.
.020
.100

0496-0-15-XX-23-XX-10-0

Press-fit in .106 mounting hole

0368

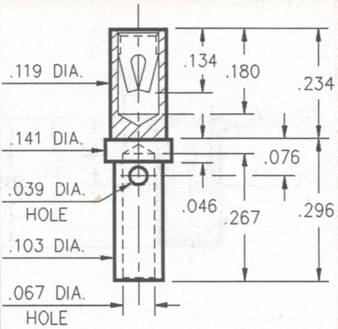
.119 DIA.
.134
.180
.234
.141 DIA.
.076
.039 DIA.
HOLE
.046
.267
.296
.103 DIA.
.067 DIA.
HOLE

0368-0-33-XX-13-XX-10-0

16A Crimp barrel

8067

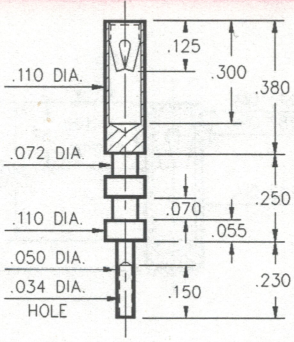
.110 DIA.
.125
.300
.380
.072 DIA.
.110 DIA.
.070
.250
.055
.050 DIA.
.034 DIA.
HOLE
.150
.230

8067-0-19-XX-13-XX-10-0

1105

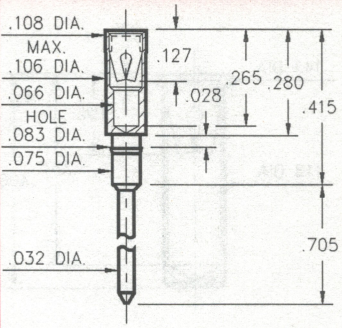
.108 DIA.
MAX.
.106 DIA.
.066 DIA.
HOLE
.083 DIA.
.075 DIA.
.127
.028
.265
.280
.415
.032 DIA.
.705

1105-0-15-XX-13-XX-04-0

Press-fit in .080 mounting hole

8730

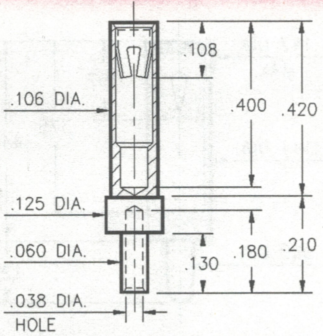
.108
.106 DIA.
.400
.420
.125 DIA.
.060 DIA.
.130
.180
.210
.038 DIA.
HOLE

8730-0-19-XX-23-XX-10-0

3667

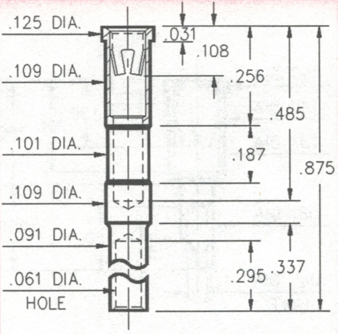
.125 DIA.
.031
.108
.109 DIA.
.256
.485
.101 DIA.
.187
.875
.109 DIA.
.091 DIA.
.061 DIA.
HOLE
.295
.337

3667-0-19-XX-23-XX-10-0

9372

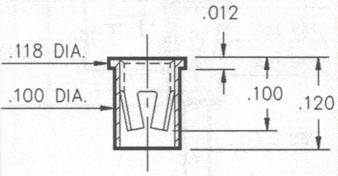
.012
.118 DIA.
.100 DIA.
.100
.120

9372-0-15-XX-23-XX-10-0

Solder mount in .102 min. mounting hole

4582

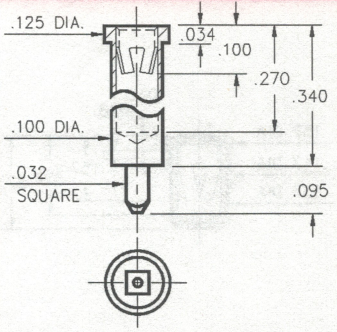
.125 DIA.
.034
.100
.270
.340
.100 DIA.
.032
SQUARE
.095

4582-0-15-XX-23-XX-10-0

Square press-fit in .040 plated thru hole

5834

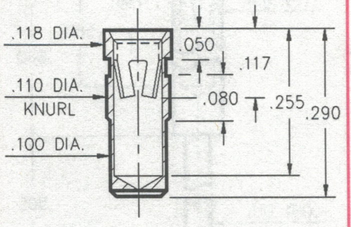
.118 DIA.
.050
.117
.110 DIA.
KNURL
.080
.255
.290
.100 DIA.

5834-0-15-XX-23-XX-10-0

Press-fit in .106 mounting hole

9401

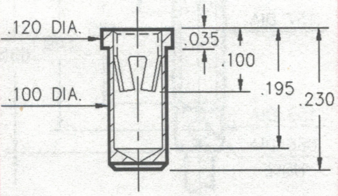
.120 DIA.
.035
.100
.100 DIA.
.195
.230

9401-0-15-XX-23-XX-10-0

Solder mount in .102 min. mounting hole

SPECIFICATIONS

SHELL MATERIAL:
Brass Alloy 360, 1/2 Hard

CONTACT MATERIAL:
Beryllium Copper Alloy 172, HT

DIMENSION IN INCHES

TOLERANCES ON:
LENGTHS: ± .005
DIAMETERS: ± .002
ANGLES: ± 2°

ORDER CODE: XXXX - X - XX - XX - X3 - XX - XX - 0

BASIC PART #

SPECIFY SHELL FINISH
01 200µ" TIN/LEAD OVER NICKEL
15 10µ" GOLD OVER NICKEL

SELECT CONTACT
# 13 OR **# 23** CONTACT (DATA ON PAGES 163)

SPECIFY CONTACT FINISH
01 200µ" TIN/LEAD OVER NICKEL
14 10µ" GOLD OVER NICKEL
27 30µ" GOLD OVER NICKEL

PIN RECEPTACLES
for .065 - .082 diameter pins

0394

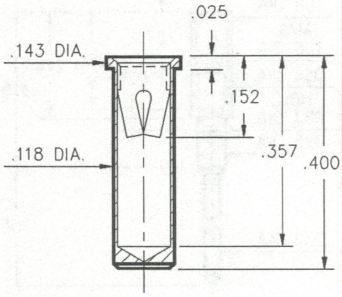

.025
.143 DIA.
.152
.118 DIA.
.357
.400

0394-0-15-XX-07-XX-10-0

Solder mount in .120 min. mounting hole

0393

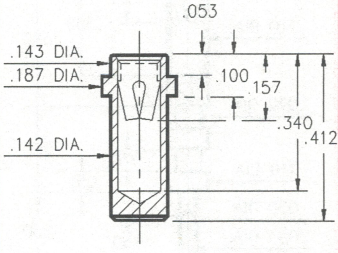

.053
.143 DIA.
.187 DIA.
.100
.157
.340
.412
.142 DIA.

0393-0-15-XX-07-XX-10-0

Solder mount in .144 min. mounting hole

0391

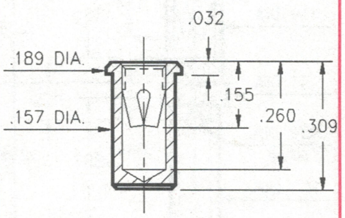

.032
.189 DIA.
.155
.157 DIA.
.260
.309

0391-0-15-XX-07-XX-10-0

Solder mount in .159 min. mounting hole

9016

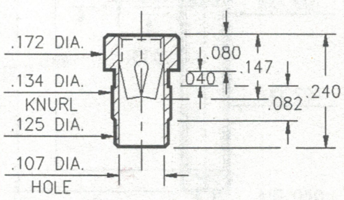

.172 DIA.
.080
.147
.040
.134 DIA. KNURL
.082
.240
.125 DIA.
.107 DIA. HOLE

9016-0-15-XX-07-XX-10-0

Press-fit in .130 mounting hole

0493

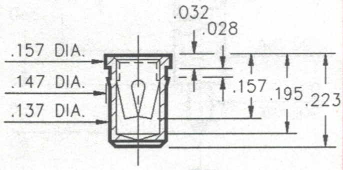

.032
.028
.157 DIA.
.147 DIA.
.157
.195
.223
.137 DIA.

0493-0-15-XX-07-XX-10-0

Press-fit in .142 mounting hole

0490

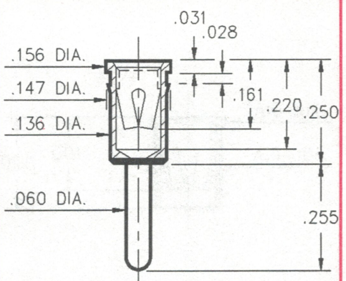

.031
.028
.156 DIA.
.147 DIA.
.161
.220
.250
.136 DIA.
.060 DIA.
.255

0490-0-15-XX-07-XX-04-0

Press-fit in .142 mounting hole

0616

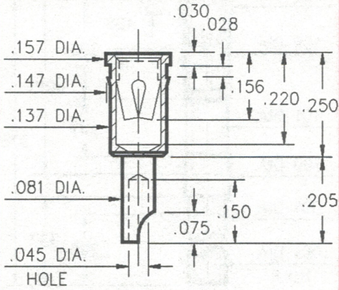

.030
.028
.157 DIA.
.147 DIA.
.156
.220
.250
.137 DIA.
.081 DIA.
.205
.150
.075
.045 DIA. HOLE

0616-0-18-XX-07-XX-10-0

Press-fit in .142 mounting hole

0387

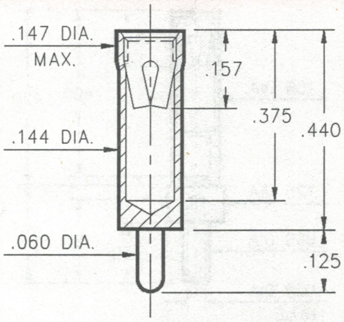

.147 DIA. MAX.
.157
.375
.440
.144 DIA.
.060 DIA.
.125

0387-0-15-XX-07-XX-04-0

Solder mount in .063 min. mounting hole

0370

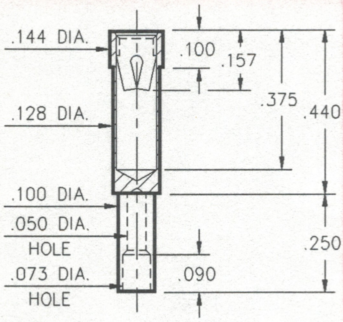

.144 DIA.
.100
.157
.375
.440
.128 DIA.
.100 DIA.
.050 DIA. HOLE
.250
.073 DIA. HOLE
.090

0370-0-19-XX-07-XX-10-0

18 Gage crimp barrel

4040

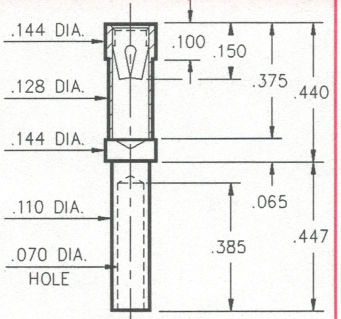

.144 DIA.
.100
.150
.375
.440
.128 DIA.
.144 DIA.
.065
.110 DIA.
.447
.385
.070 DIA. HOLE

4040-0-19-XX-07-XX-10-0

Wire Termination

0491

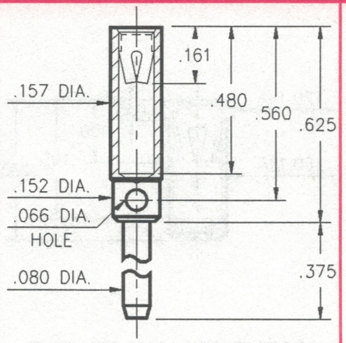

.161
.157 DIA.
.480
.560
.625
.152 DIA.
.066 DIA. HOLE
.080 DIA.
.375

0491-0-19-XX-07-XX-04-0

For use in stackable patch cords

9214

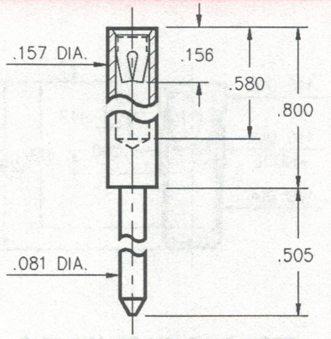

.157 DIA.
.156
.580
.800
.081 DIA.
.505

9214-0-15-XX-07-XX-10-0

Solder mount in .083 min. mounting hole

SPECIFICATIONS

SHELL MATERIAL:
Brass Alloy 360, 1/2 Hard

CONTACT MATERIAL:
Beryllium Copper Alloy 172, HT

DIMENSION IN INCHES
TOLERANCES ON:

LENGTHS:	± .005
DIAMETERS:	± .002
ANGLES:	± 2°

ORDER CODE: XXXX - 0 - 1X - XX - 07 - XX - XX - 0

BASIC PART #

SPECIFY SHELL FINISH

01 200µ" TIN/LEAD OVER NICKEL
15 10µ" GOLD OVER NICKEL

CONTACT
# 07 CONTACT (DATA ON PAGE 163)

SPECIFY CONTACT FINISH

01 200µ" TIN/LEAD OVER NICKEL
14 10µ" GOLD OVER NICKEL
27 30µ" GOLD OVER NICKEL

PIN RECEPTACLES
for .065 - .082 diameter pins

0395

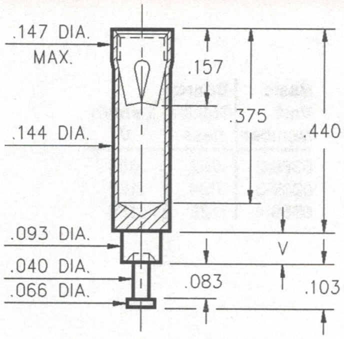

Basic Part Number	Board Thick- ness	Length V
0395-1	.031	.062
0395-2	.062	.094
0395-3	.094	.125
0395-4	.125	.156
0395-5	.188	.219

0395-X-15-XX-07-XX-10-0

Swage mount in .096 hole

SPECIFICATIONS

SHELL MATERIAL:
Brass Alloy 360, 1/2 Hard

CONTACT MATERIAL:
Beryllium Copper Alloy 172, HT

DIMENSION IN INCHES
TOLERANCES ON:
LENGTHS: ± .005
DIAMETERS: ± .002
ANGLES: ± 2°

ORDER CODE: 0395 - X - 15 - XX - 07 - XX - 10 - 0

BASIC PART #

SPECIFY SHELL FINISH
01 200µ" TIN/LEAD OVER NICKEL
15 10µ" GOLD OVER NICKEL

CONTACT
# 07 CONTACT (DATA ON PAGE 163)

SPECIFY CONTACT FINISH
01 200µ" TIN/LEAD OVER NICKEL
14 10µ" GOLD OVER NICKEL
27 30µ" GOLD OVER NICKEL

# PIN RECEPTACLES
for .084 - .102 diameter pins

0388

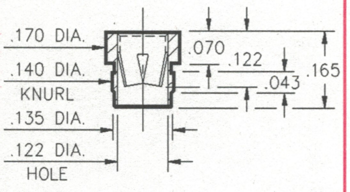

.170 DIA.
.140 DIA.
KNURL
.135 DIA.
.122 DIA.
HOLE
.070
.122
.043
.165

0388-0-15-XX-08-XX-10-0
Press-fit in .138 mounting hole

0390

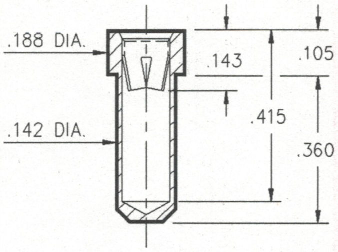

.188 DIA.
.142 DIA.
.143
.105
.415
.360

0390-0-15-XX-08-XX-10-0
Solder mount in .144 min.
mounting hole

0389

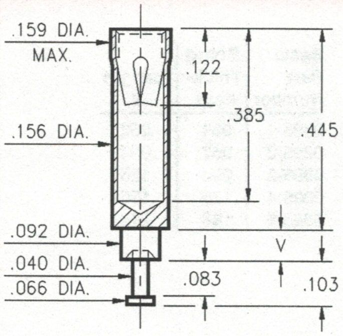

.159 DIA.
MAX.
.156 DIA.
.092 DIA.
.040 DIA.
.066 DIA.
.122
.385
.445
V
.083
.103

0389-X-15-XX-08-XX-10-0
Swage mount in .094 hole

Basic Part Number	Board Thickness	Length V
0389-2	.062	.094
0389-3	.094	.125
0389-4	.125	.156

SPECIFICATIONS

SHELL MATERIAL:
Brass Alloy 360, 1/2 Hard

CONTACT MATERIAL:
Beryllium Copper Alloy 172, HT

DIMENSION IN INCHES
TOLERANCES ON:

LENGTHS:	± .005
DIAMETERS:	± .002
ANGLES:	± 2°

ORDER CODE: 03XX - X - 15 - XX - 08 - XX - 10 - 0

BASIC PART #

SPECIFY SHELL FINISH
01 200µ" TIN/LEAD OVER NICKEL
15 10µ" GOLD OVER NICKEL

CONTACT
# 08 CONTACT (DATA ON PAGE 164)

SPECIFY CONTACT FINISH
01 200µ" TIN/LEAD OVER NICKEL
14 10µ" GOLD OVER NICKEL
27 30µ" GOLD OVER NICKEL

# WRAPOST RECEPTACLES
for .015 - .025 diameter pins

1702/1703

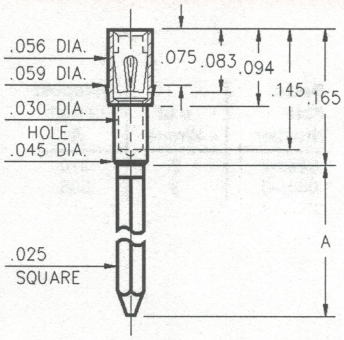

.056 DIA.
.059 DIA.
.030 DIA.
HOLE
.045 DIA.
.025
SQUARE
.075
.083
.094
.145
.165
A

Basic Part Number	# of Wraps	Wrapost Length A
1702-2	2	.370
1703-3	3	.500

170X-X-17-XX-30-XX-02-0
Press-fit in .057 mounting hole

0038⇒0040/0066⇒0068

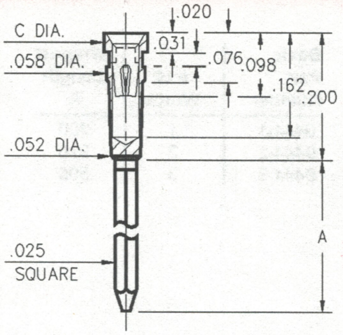

C DIA.
.058 DIA.
.052 DIA.
.025
SQUARE
.020
.031
.076
.098
.162
.200
A

Basic Part #	# of Wraps	Wrapost Length A	Head Dia. C
0040-1	1	.260	.072
0039-2	2	.360	
0038-3	3	.500	
0068-1	1	.260	.062
0067-2	2	.360	
0066-3	3	.500	

00XX-X-17-XX-30-XX-02-0
Press-fit in .055 mounting hole

0086/0088/0089

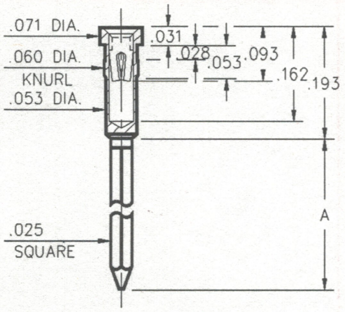

.071 DIA.
.060 DIA.
KNURL
.053 DIA.
.025
SQUARE
.031
.028
.053
.093
.162
.193
A

Basic Part Number	# of Wraps	Wrapost Length A
0089-2	2	.370
0088-3	3	.500
0086-4	4	.630

008X-X-17-XX-3X-XX-02-0
Press-fit in .057 mounting hole

1030⇒1036

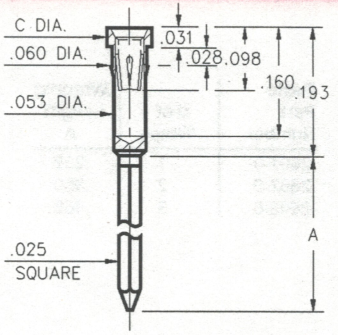

C DIA.
.060 DIA.
.053 DIA.
.025
SQUARE
.031
.028
.098
.160
.193
A

Basic Part #	# of Wraps	Wrapost Length A	Head Dia. C
1032-1	1	.260	.072
1031-2	2	.360	
1030-3	3	.510	
1036-1	1	.260	.062
1035-2	2	.360	
1034-3	3	.510	

103X-X-17-XX-3X-XX-02-0
Press-fit in .057 mounting hole

1045

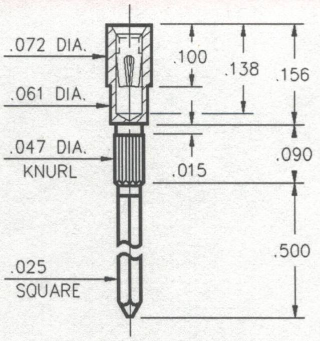

.072 DIA.
.061 DIA.
.047 DIA.
KNURL
.025
SQUARE
.100
.138
.156
.015
.090
.500

1045-3-17-XX-30-XX-02-0
Press-fit in .043 mounting hole

1040

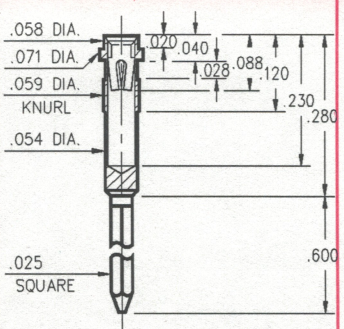

.058 DIA.
.071 DIA.
.059 DIA.
KNURL
.054 DIA.
.025
SQUARE
.020
.040
.028
.088
.120
.230
.280
.600

1040-3-17-XX-30-XX-02-0
Press-fit in .056 mounting hole

SPECIFICATIONS

SHELL MATERIAL:
Brass Alloy 360, 1/2 Hard
CONTACT MATERIAL:
Beryllium Copper Alloy 172, HT
DIMENSION IN INCHES
TOLERANCES ON:
LENGTHS: ± .005
DIAMETERS: ± .002
ANGLES: ± 2°

ORDER CODE: XXXX - X - 17 - XX - 3X - XX - 02 - 0

BASIC PART #

SPECIFY SHELL FINISH
01 200µ" TIN/LEAD OVER NICKEL
15 10µ" GOLD OVER NICKEL

SELECT CONTACT
# 30 OR **# 32** CONTACT (DATA ON PAGES 157 & 158)

SPECIFY CONTACT FINISH
02 100µ" TIN/LEAD OVER NICKEL
14 10µ" GOLD OVER NICKEL
27 30µ" GOLD OVER NICKEL

WRAPOST RECEPTACLES
for .015 - .025 diameter pins

0444

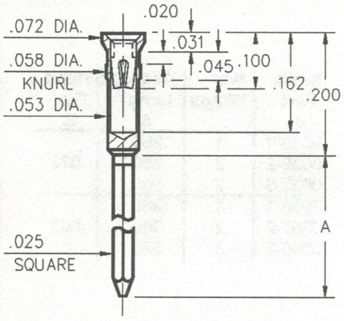

.072 DIA.
.058 DIA.
KNURL
.053 DIA.
.025
SQUARE
.020
.031
.045
.100
.162
.200
A

Basic Part Number	# of Wraps	Wrapost Length A
0444-1	1	.260
0444-2	2	.370
0444-3	3	.505

0444-X-17-XX-30-XX-02-0

Press-fit in .056 mounting hole

0445/0446

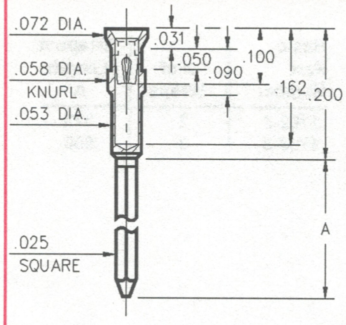

.072 DIA.
.058 DIA.
KNURL
.053 DIA.
.025
SQUARE
.031
.050
.090
.100
.162
.200
A

Basic Part Number	# of Wraps	Wrapost Length A
0446-2	2	.370
0445-3	3	.505

044X-X-17-XX-30-XX-02-0

Press-fit in .056 mounting hole

2601⇒2603

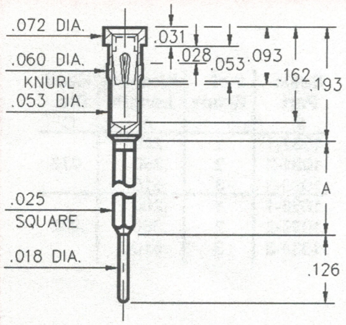

.072 DIA.
.060 DIA.
KNURL
.053 DIA.
.025
SQUARE
.018 DIA.
.031
.028
.053
.093
.162
.193
A
.126

Basic Part Number	# of Wraps	Wrapost Length A
2601-0	1	.232
2602-0	2	.350
2603-0	3	.468

260X-X-17-XX-30-XX-02-0

Press-fit in .057 mounting hole

1047

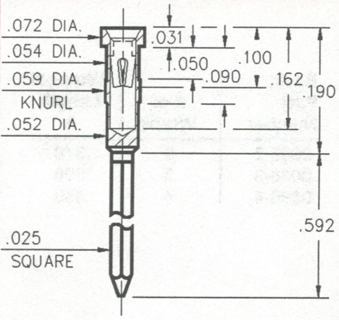

.072 DIA.
.054 DIA.
.059 DIA.
KNURL
.052 DIA.
.025
SQUARE
.031
.050
.100
.090
.162
.190
.592

1047-3-17-XX-30-XX-02-0

Press-fit in .056 mounting hole

SPECIFICATIONS

SHELL MATERIAL:
Brass Alloy 360, 1/2 Hard

CONTACT MATERIAL:
Beryllium Copper Alloy 172, HT

DIMENSION IN INCHES

TOLERANCES ON:

LENGTHS:	± .005
DIAMETERS:	± .002
ANGLES:	± 2°

ORDER CODE: XXXX - X - 17 - XX - 30 - XX - 02 - 0

BASIC PART #

SPECIFY SHELL FINISH

01 200μ" TIN/LEAD OVER NICKEL
15 10μ" GOLD OVER NICKEL

SPECIFY CONTACT FINISH

02 100μ" TIN/LEAD OVER NICKEL
14 10μ" GOLD OVER NICKEL
27 30μ" GOLD OVER NICKEL

CONTACT

# 30 CONTACT (DATA ON PAGE 157)

WRAPOST RECEPTACLES
for .022 - .032 diameter pins (#06 contact) and .022 - .034 diameter pins (#16 contact)

2297

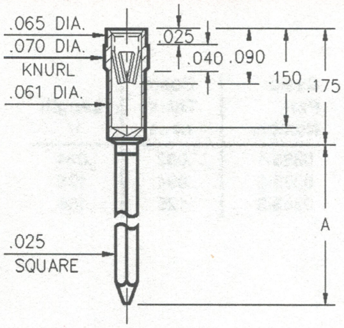

.065 DIA.
.070 DIA.
KNURL
.061 DIA.
.025
.040
.090
.150
.175
A
.025
SQUARE

Basic Part Number	# of Wraps	Wrapost Length A
2297-2	2	.370
2297-3	3	.430

2297-X-17-XX-16-XX-02-0

Press-fit in .067 mounting hole

0280

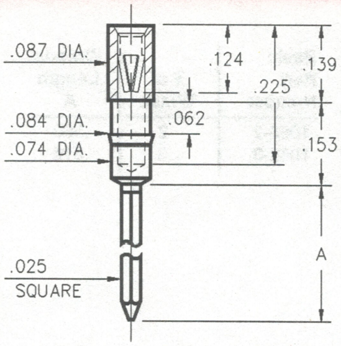

.087 DIA.
.124
.139
.225
.084 DIA.
.062
.074 DIA.
.153
A
.025
SQUARE

Basic Part Number	# of Wraps	Wrapost Length A
0280-2	2	.360
0280-3	3	.510

0280-X-17-XX-06-XX-02-0

Press-fit in .079 mounting hole

0281

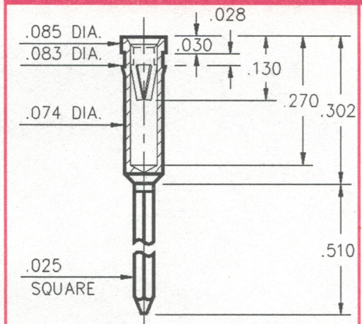

.028
.085 DIA.
.083 DIA.
.030
.130
.270
.302
.074 DIA.
.510
.025
SQUARE

0281-3-17-XX-06-XX-02-0

Press-fit in .079 mounting hole

SPECIFICATIONS

SHELL MATERIAL:
Brass Alloy 360, 1/2 Hard

CONTACT MATERIAL:
Beryllium Copper Alloy 172, HT

DIMENSION IN INCHES
TOLERANCES ON:

LENGTHS:	± .005
DIAMETERS:	± .002
ANGLES:	± 2°

ORDER CODE: XXXX - X - 17 - XX - X6 - XX - 02 - 0

BASIC PART #

SPECIFY SHELL FINISH

01 200μ" TIN/LEAD OVER NICKEL
15 10μ" GOLD OVER NICKEL

SELECT CONTACT
# 06 or **# 16** CONTACT (DATA ON PAGES 159, 160)

SPECIFY CONTACT FINISH

01 200μ" TIN/LEAD OVER NICKEL
14 10μ" GOLD OVER NICKEL
27 30μ" GOLD OVER NICKEL

WRAPOST RECEPTACLES
for .032 - .047 diameter pins

1052/1053

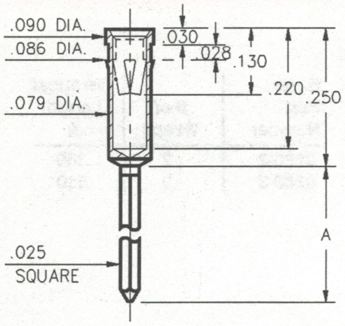
.090 DIA.
.086 DIA.
.079 DIA.
.030
.028
.130
.220
.250
A
.025
SQUARE

Basic Part Number	# of Wraps	Wrapost Length A
1053-2	2	.360
1052-3	3	.515

105X-X-17-XX-34-XX-02-0

Press-fit in .083 mounting hole

0383

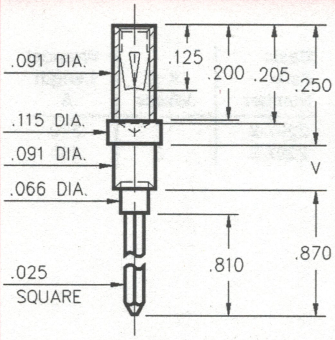
.091 DIA.
.125
.200
.205
.250
.115 DIA.
.091 DIA.
.066 DIA.
V
.810
.870
.025
SQUARE

Basic Part Number	Board Thick-ness	Length V
0383-1	.062	.094
0383-2	.094	.125
0383-3	.125	.156

0383-X-17-XX-34-XX-02-0

Swage mount in .094 hole

0382

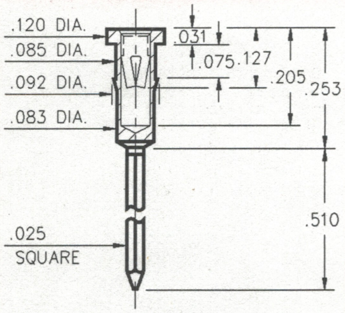
.120 DIA.
.085 DIA.
.092 DIA.
.083 DIA.
.031
.075
.127
.205
.253
.510
.025
SQUARE

0382-3-17-XX-34-XX-02-0

Press-fit in .087 mounting hole

SPECIFICATIONS

SHELL MATERIAL:
Brass Alloy 360, 1/2 Hard

CONTACT MATERIAL:
Beryllium Copper Alloy 172, HT

DIMENSION IN INCHES
TOLERANCES ON:
LENGTHS: ± .005
DIAMETERS: ± .002
ANGLES: ± 2°

ORDER CODE: XXXX - X - 17 - XX - 34 - XX - 02 - 0

BASIC PART #

SPECIFY SHELL FINISH
01 200µ” TIN/LEAD OVER NICKEL
15 10µ” GOLD OVER NICKEL

SPECIFY CONTACT FINISH
01 200µ” TIN/LEAD OVER NICKEL
14 10µ” GOLD OVER NICKEL
27 30µ” GOLD OVER NICKEL

CONTACT
# 34 CONTACT (DATA ON PAGES 161)

PRINTED CIRCUIT PINS

3006

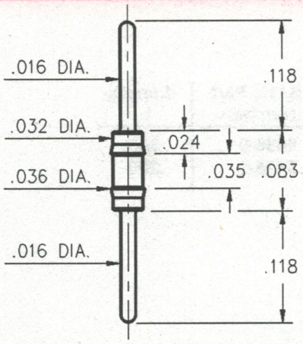

.016 DIA.
.032 DIA.
.036 DIA.
.016 DIA.
.118
.024
.035
.083
.118

3006-0-00-XX-00-00-03-0

Press-fit in .034 mounting hole

4006

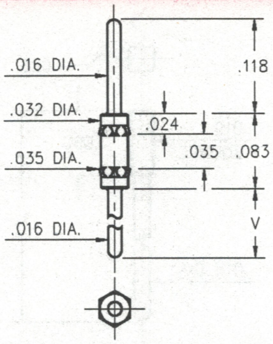

.016 DIA.
.032 DIA.
.035 DIA.
.016 DIA.
.118
.024
.035
.083
V

Basic Part Number	Length V
4006-0	.118
4006-1	.188
4006-2	.288

4006-X-00-XX-00-00-03-0

Hex Press-fit in .034 mounting hole

8685

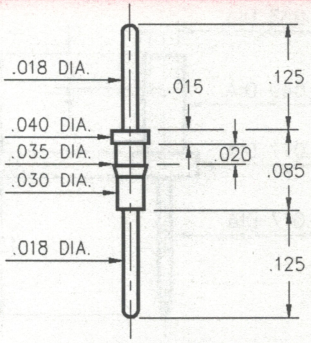

.018 DIA.
.040 DIA.
.035 DIA.
.030 DIA.
.018 DIA.
.015
.125
.020
.085
.125

8685-0-00-XX-00-00-03-0

Press-fit in .033 mounting hole

Pin material is Ph. Br. 544 (B2)

3121

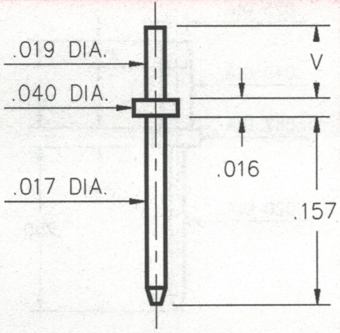

.019 DIA.
.040 DIA.
.017 DIA.
V
.016
.157

Basic Part Number	Substrate Thickness	Length V
3121-1	.025	.061
3121-2	.040	.075

3121-X-00-XX-00-00-08-0

Solder mount in .023 mounting hole.

Material is annealed.

3128

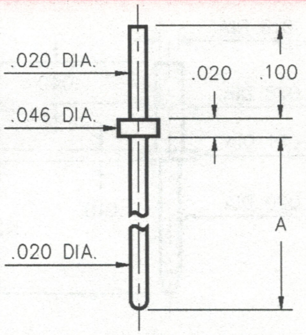

.020 DIA.
.046 DIA.
.020 DIA.
.020
.100
A

Basic Part Number	Length A
3128-1	.250
3128-2	.425
3128-3	.525
3128-4	.550
3128-5	.930

3128-X-00-XX-00-00-08-0

Solder mount in .024 mounting hole

6218

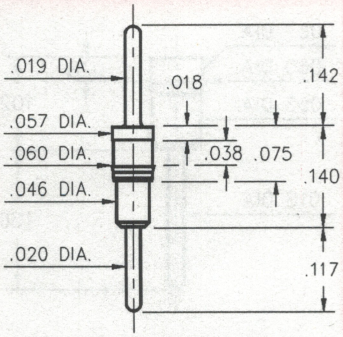

.019 DIA.
.057 DIA.
.060 DIA.
.046 DIA.
.020 DIA.
.018
.142
.038
.075
.140
.117

6218-0-00-XX-00-00-03-0

Press-fit in .057 mounting hole

5012

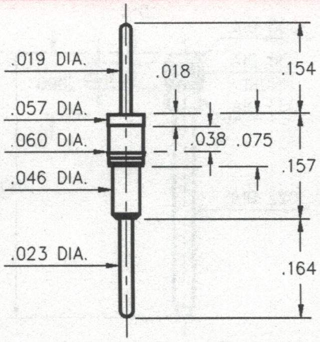

.019 DIA.
.057 DIA.
.060 DIA.
.046 DIA.
.023 DIA.
.018
.154
.038
.075
.157
.164

5012-0-00-XX-00-00-03-0

Press-fit in .057 mounting hole

0508

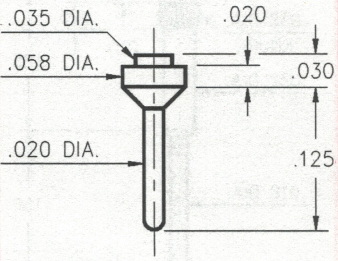

.035 DIA.
.058 DIA.
.020 DIA.
.020
.030
.125

0508-0-00-XX-00-00-03-0

Surface Mount

9081

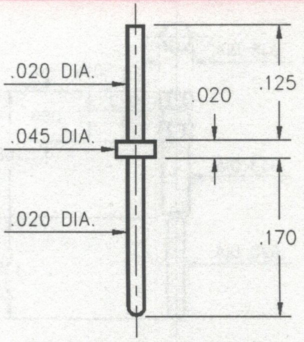

.020 DIA.
.045 DIA.
.020 DIA.
.020
.125
.170

9081-0-00-XX-00-00-08-0

Solder mount in .024 mounting hole

SPECIFICATIONS

PIN MATERIAL:

Brass Alloy 360, 1/2 Hard
(Except where noted)

DIMENSION IN INCHES

TOLERANCES ON:

LENGTHS:	± .005
DIAMETERS:	± .002
ANGLES:	± 2°

ORDER CODE: XXXX - X - 00 - XX - 00 - 00 - 0X - 0

BASIC PART #

SPECIFY PIN FINISH

- **01** 200µ" TIN/LEAD OVER NICKEL
- **15** 10µ" GOLD OVER NICKEL
- **21** 20µ" GOLD OVER NICKEL
- **34** 50µ" GOLD OVER NICKEL

3116

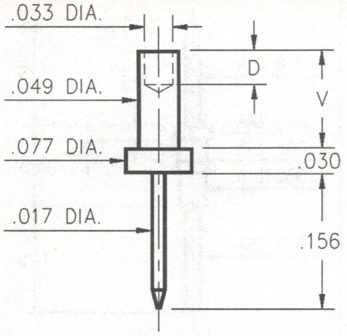
.033 DIA.
.049 DIA.
.077 DIA.
.017 DIA.
D
V
.030
.156

Basic Part Number	Board Thick-ness	Length V	Depth D
3116-1	.031	.051	.035
3116-2	.062	.082	.062
3116-3	.094	.113	.062
3116-4	.125	.145	.062

3116-X-00-XX-00-00-08-0

Swage mount in .052 hole

5435

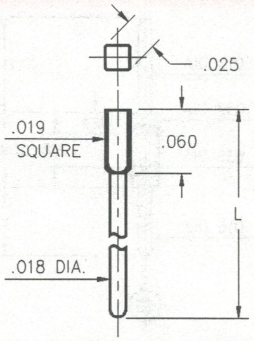
.025
.019
SQUARE
.060
L
.018 DIA.

Basic Part Number	Length L
5435-0	.303
5435-1	.200

5435-X-05-XX-00-00-03-0

Square press-fit in .022
plated thru hole

3135

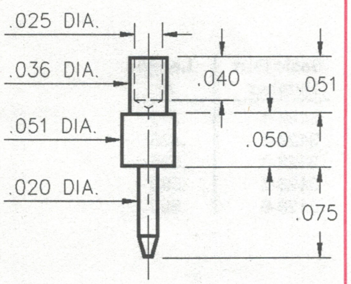
.025 DIA.
.036 DIA.
.051 DIA.
.020 DIA.
.040
.051
.050
.075

3135-1-00-XX-00-00-08-0

Swage mount in .040 hole.
For .031 thick board.

3210

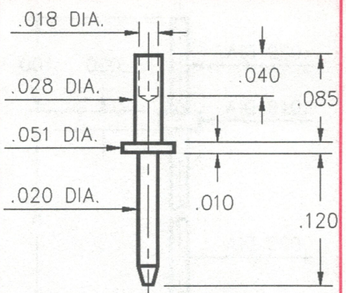
.018 DIA.
.028 DIA.
.051 DIA.
.020 DIA.
.040
.085
.010
.120

3210-2-00-XX-00-00-08-0

Swage mount in .031 hole.
For .062 thick board

3129

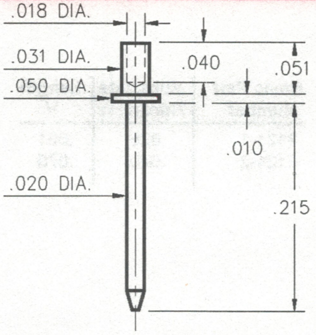
.018 DIA.
.031 DIA.
.050 DIA.
.020 DIA.
.040
.051
.010
.215

3129-1-00-XX-00-00-08-0

Swage mount in .035 hole.
For .031 thick board

3147

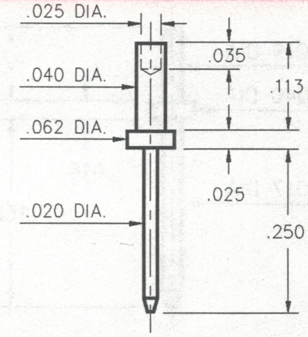
.025 DIA.
.040 DIA.
.062 DIA.
.020 DIA.
.035
.113
.025
.250

3147-3-00-XX-00-00-08-0

Swage mount in .043 hole.
For .094 thick board

4366

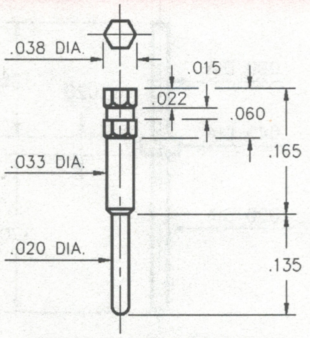
.038 DIA.
.033 DIA.
.020 DIA.
.015
.022
.060
.165
.135

4366-0-00-XX-00-00-03-0

Hex press-fit in .035
plated thru hole

1267

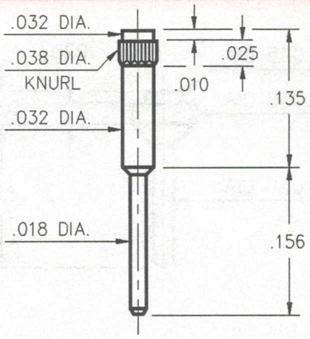
.032 DIA.
.038 DIA.
KNURL
.032 DIA.
.018 DIA.
.025
.010
.135
.156

1267-0-00-XX-00-00-03-0

Press-fit in .035 mounting hole

7827

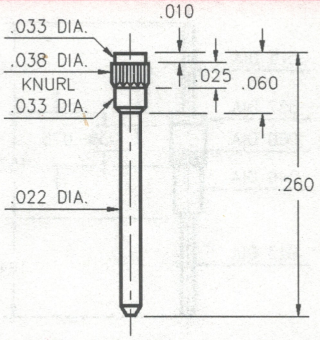
.033 DIA.
.038 DIA.
KNURL
.033 DIA.
.022 DIA.
.010
.025
.060
.260

7827-0-00-XX-00-00-03-0

Press-fit in .035 mounting hole

1130

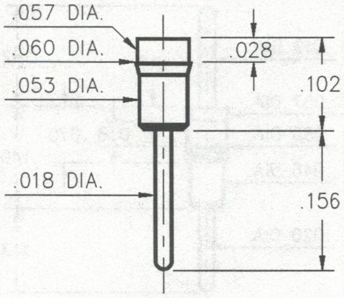
.057 DIA.
.060 DIA.
.053 DIA.
.018 DIA.
.028
.102
.156

1130-0-00-XX-00-00-03-0

Press-fit in .057 mounting hole
Pin material is Ph Br 544 (B2)

SPECIFICATIONS

PIN MATERIAL:
Brass Alloy 360, 1/2 Hard
(Except Swage pins which
are annealed)

DIMENSION IN INCHES
TOLERANCES ON:
LENGTHS: ± .005
DIAMETERS: ± .002
ANGLES: ± 2°

ORDER CODE: XXXX - X - 00 - XX - 00 - 00 - 0X - 0

BASIC PART #

SPECIFY PIN FINISH

01 200μ" TIN/LEAD OVER NICKEL
15 10μ" GOLD OVER NICKEL
21 20μ" GOLD OVER NICKEL
34 50μ" GOLD OVER NICKEL

PRINTED CIRCUIT PINS

3158

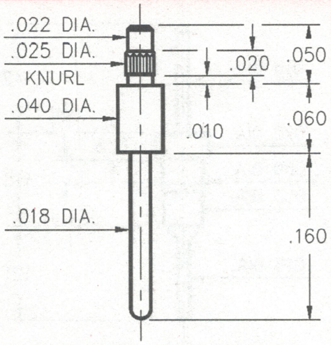
.022 DIA.
.025 DIA.
KNURL
.040 DIA.
.018 DIA.
.020
.050
.010
.060
.160

3158-0-00-XX-00-00-03-0

Press-fit in .023 mounting hole

9000

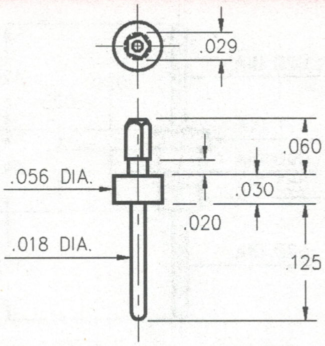
.029
.056 DIA.
.018 DIA.
.060
.030
.020
.125

9000-0-00-XX-00-00-03-0

Pentagonal press-fit in .026 plated thru hole

3157

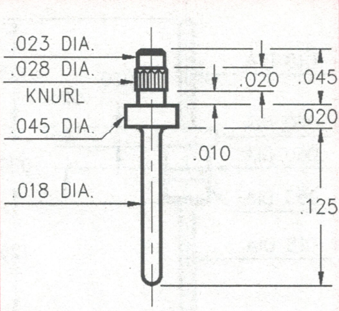
.023 DIA.
.028 DIA.
KNURL
.045 DIA.
.018 DIA.
.020
.045
.020
.010
.125

3157-0-00-XX-00-00-03-0

Press-fit in .026 mounting hole

3155

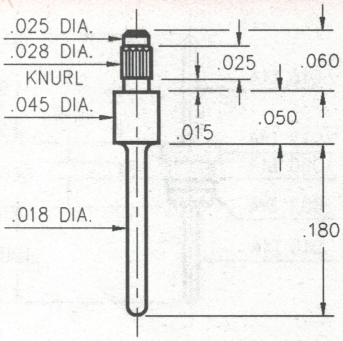
.025 DIA.
.028 DIA.
KNURL
.045 DIA.
.018 DIA.
.025
.060
.015
.050
.180

3155-0-00-XX-00-00-03-0

Press-fit in .026 mounting hole

Pin material is Ph Br 544(B2)

3154

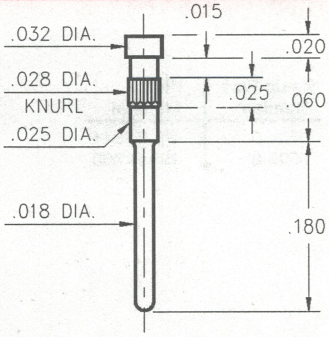
.015
.032 DIA.
.028 DIA.
KNURL
.025 DIA.
.018 DIA.
.020
.025
.060
.180

3154-0-00-XX-00-00-03-0

Press-fit in .026 mounting hole

Pin material is Ph Br 544 (B2)

0542

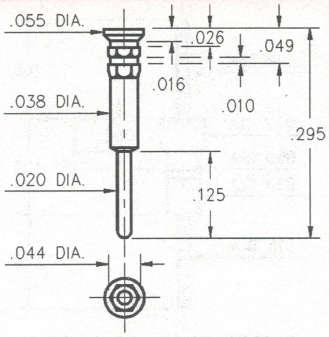
.055 DIA.
.038 DIA.
.020 DIA.
.044 DIA.
.026
.049
.016
.010
.295
.125

0542-0-00-XX-00-00-03-0

Hex press-fit in .040 plated thru hole

0522

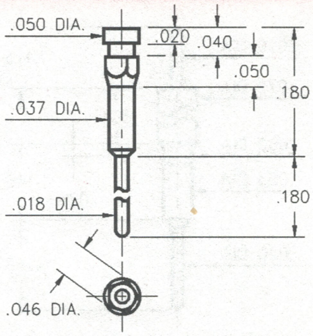
.050 DIA.
.037 DIA.
.018 DIA.
.046 DIA.
.020
.040
.050
.180
.180

0522-0-00-XX-00-00-03-0

Pentagonal press-fit in .041 plated thru hole

0952

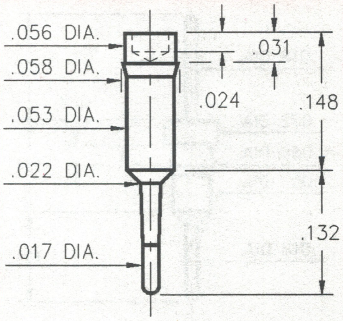
.056 DIA.
.058 DIA.
.053 DIA.
.022 DIA.
.017 DIA.
.031
.024
.148
.132

0952-0-00-XX-00-00-03-0

Press-fit in .056 mounting hole

1067

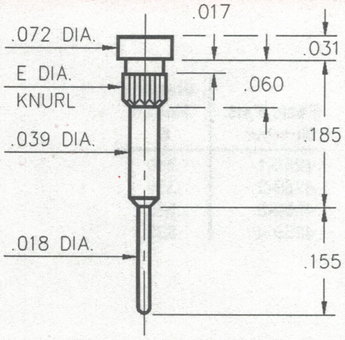
.017
.072 DIA.
E DIA.
KNURL
.039 DIA.
.018 DIA.
.031
.060
.185
.155

Basic Part Number	Knurl Dia. E	Mounting Hole
1067-1	.058	.055
1067-2	.045	.042

1067-X-00-XX-00-00-03-0

Press-fit in .042/.055 mounting hole

0257

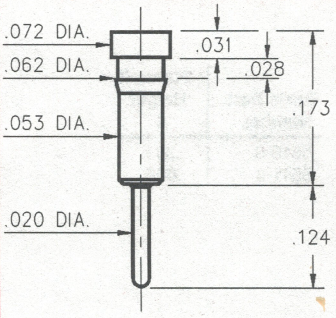
.072 DIA.
.062 DIA.
.053 DIA.
.020 DIA.
.031
.028
.173
.124

0257-0-00-XX-00-00-03-0

Press-fit in .059 mounting hole

0915

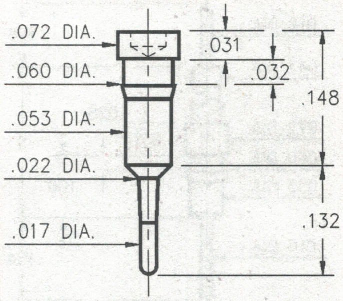
.072 DIA.
.060 DIA.
.053 DIA.
.022 DIA.
.017 DIA.
.031
.032
.148
.132

0915-0-00-XX-00-00-03-0

Press-fit in .057 mounting hole

SPECIFICATIONS

PIN MATERIAL:
Brass Alloy 360, 1/2 Hard
(Except where noted)

DIMENSION IN INCHES
TOLERANCES ON:
LENGTHS: ± .005
DIAMETERS: ± .002
ANGLES: ± 2°

ORDER CODE: XXXX - X - 00 - XX - 00 - 00 - 03 - 0

BASIC PART #

SPECIFY PIN FINISH

01 200µ” TIN/LEAD OVER NICKEL
15 10µ” GOLD OVER NICKEL
21 20µ” GOLD OVER NICKEL
34 50µ” GOLD OVER NICKEL

PRINTED CIRCUIT PINS

3516

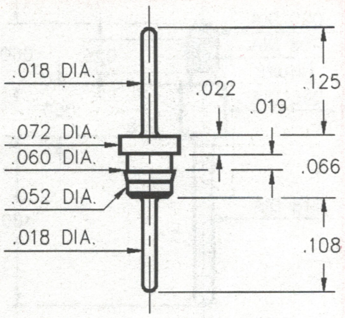

.018 DIA.
.072 DIA.
.060 DIA.
.052 DIA.
.018 DIA.
.022
.019
.125
.066
.108

3516-0-00-XX-00-00-03-0

Press-fit in .057 mounting hole

1752

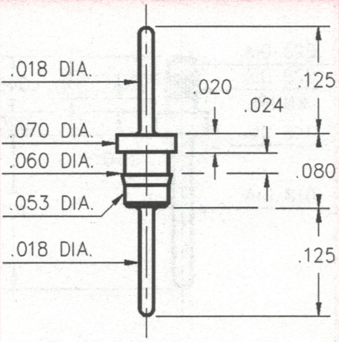

.018 DIA.
.070 DIA.
.060 DIA.
.053 DIA.
.018 DIA.
.020
.024
.125
.080
.125

1752-0-00-XX-00-00-03-0

Press-fit in .057 mounting hole

6585

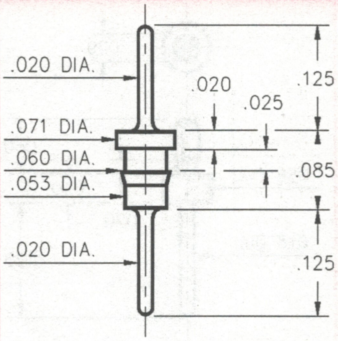

.020 DIA.
.071 DIA.
.060 DIA.
.053 DIA.
.020 DIA.
.020
.025
.125
.085
.125

6585-0-00-XX-00-00-03-0

Press-fit in .057 mounting hole

Pin material is Ph Br 544(B2)

3413

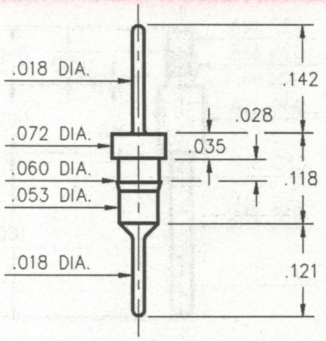

.018 DIA.
.072 DIA.
.060 DIA.
.053 DIA.
.018 DIA.
.142
.028
.035
.118
.121

3413-0-00-XX-00-00-03-0

Press-fit in .057 mounting hole

3404

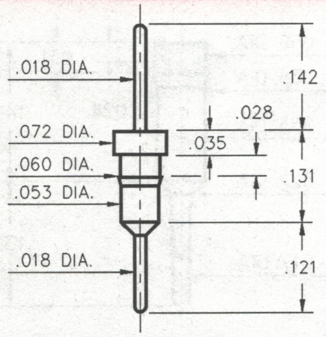

.018 DIA.
.072 DIA.
.060 DIA.
.053 DIA.
.018 DIA.
.142
.028
.035
.131
.121

3404-0-00-XX-00-00-03-0

Press-fit in .057 mounting hole

3403

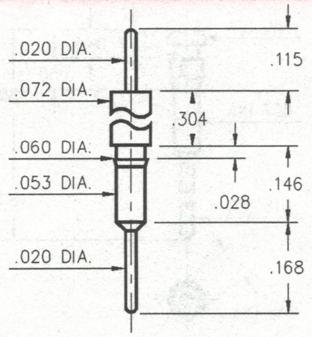

.020 DIA.
.072 DIA.
.060 DIA.
.053 DIA.
.020 DIA.
.115
.304
.028
.146
.168

3403-0-00-XX-00-00-03-0

Press-fit in .057 mounting hole

0504/0505

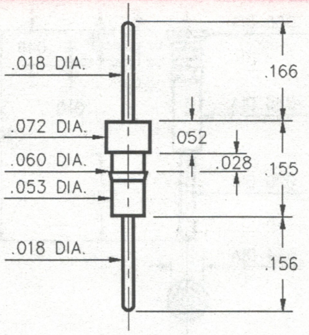

.018 DIA.
.072 DIA.
.060 DIA.
.053 DIA.
.018 DIA.
.166
.052
.028
.155
.156

050X-0-00-XX-00-00-03-0

Press-fit in .057 mounting hole

Basic Part Number	Pin Material
0504-0	Ph Br 544
0505-0	Brass 360

5510/5511

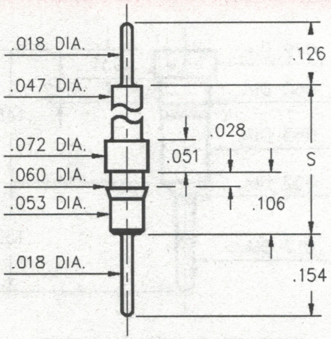

.018 DIA.
.047 DIA.
.072 DIA.
.060 DIA.
.053 DIA.
.018 DIA.
.126
.028
.051
S
.106
.154

551X-0-00-XX-00-00-03-0

Press-fit in .057 mounting hole

Basic Part Number	Standoff Height S
5510-0	.331
5511-0	.606

4259

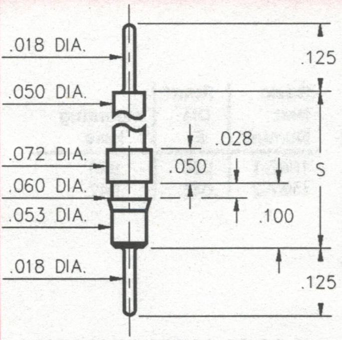

.018 DIA.
.050 DIA.
.072 DIA.
.060 DIA.
.053 DIA.
.018 DIA.
.125
.028
.050
S
.100
.125

4259-X-00-XX-00-00-03-0

Press-fit in .057 mounting hole

Basic Part Number	Standoff Height S
4259-1	.210
4259-2	.335
4259-3	.585
4259-4	.835

SPECIFICATIONS

PIN MATERIAL:
Brass Alloy 360, 1/2 Hard
(Except where noted)

DIMENSION IN INCHES
TOLERANCES ON:
LENGTHS: ± .005
DIAMETERS: ± .002
ANGLES: ± 2°

ORDER CODE: XXXX - X - 00 - XX - 00 - 00 - 03 - 0

BASIC PART #

SPECIFY PIN FINISH

01 200μ" TIN/LEAD OVER NICKEL
15 10μ" GOLD OVER NICKEL
21 20μ" GOLD OVER NICKEL
34 50μ" GOLD OVER NICKEL

3406/3407

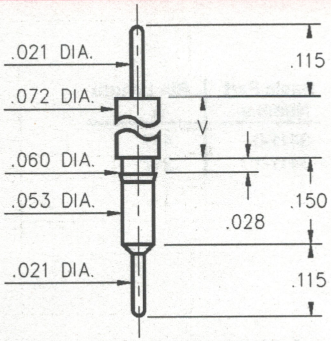
.021 DIA.
.072 DIA.
.060 DIA.
.053 DIA.
.021 DIA.
.115
V
.150
.028
.115

Basic Part Number	Shoulder Height V
3406-0	.350
3407-0	.600

340X-0-00-XX-00-00-03-0

Press-fit in .057 mounting hole

0315

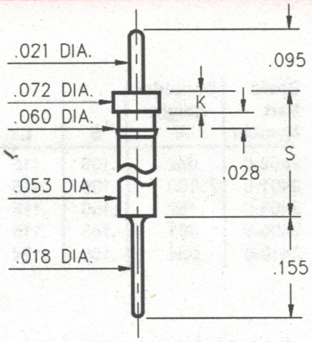
.021 DIA.
.072 DIA.
.060 DIA.
.053 DIA.
.018 DIA.
.095
K
S
.028
.155

Basic Height Number	Head Height K	Stand-off Height S
0315-0	.030	.190
0315-1	.040	.430

0315-X-00-XX-00-00-03-0

Press-fit in .057 mounting hole

Pin material is Ph Br 544(B2)

5011

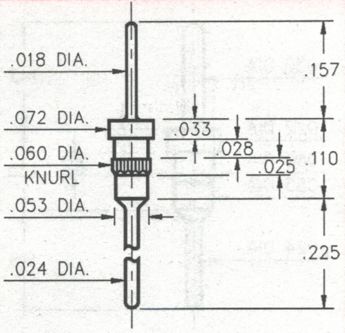
.018 DIA.
.072 DIA.
.060 DIA.
KNURL
.053 DIA.
.024 DIA.
.157
.033
.028
.025
.110
.225

5011-0-00-XX-00-00-03-0

Press-fit n .057 mounting hole

5113

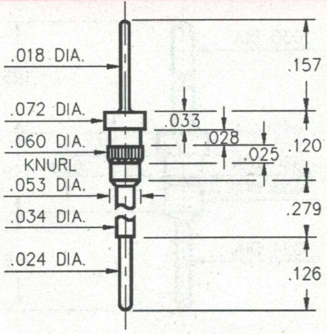
.018 DIA.
.072 DIA.
.060 DIA.
KNURL
.053 DIA.
.034 DIA.
.024 DIA.
.157
.033
.028
.025
.120
.279
.126

5113-0-00-XX-00-00-03-0

Press-fit n .057 mounting hole

5503/5509

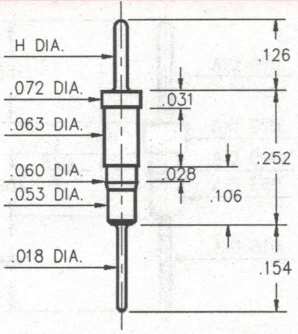
H DIA.
.072 DIA.
.063 DIA.
.060 DIA.
.053 DIA.
.018 DIA.
.126
.031
.028
.252
.106
.154

Basic Part Number	Pin Diameter H
5503-0	.025
5509-0	.018

550X-0-00-XX-00-00-03-0

Press-fit in .057 mounting hole

5504/5505

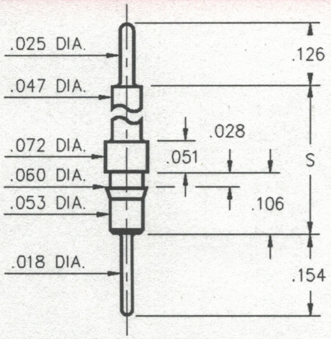
.025 DIA.
.047 DIA.
.072 DIA.
.060 DIA.
.053 DIA.
.018 DIA.
.126
.028
.051
S
.106
.154

Basic Part Number	Stand-off Height S
5504-0	.331
5505-0	.606

550X-0-00-XX-00-00-03-0

Press-fit in .057 mounting hole

3409

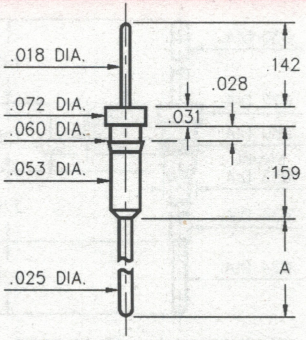
.018 DIA.
.072 DIA.
.060 DIA.
.053 DIA.
.025 DIA.
.142
.028
.031
.159
A

Basic Part Number	Pin Length A
3409-1	.210
3409-2	.420

3409-X-00-XX-00-00-03-0

Press-fit in .057 mounting hole

SPECIFICATIONS

PIN MATERIAL:
Brass Alloy 360, 1/2 Hard
(Except where noted)

DIMENSION IN INCHES
TOLERANCES ON:
LENGTHS: ± .005
DIAMETERS: ± .002
ANGLES: ± 2°

ORDER CODE: XXXX - X - 00 - XX - 00 - 00 - 03 - 0

BASIC PART #

SPECIFY PIN FINISH

- **01** 200µ" TIN/LEAD OVER NICKEL
- **15** 10µ" GOLD OVER NICKEL
- **21** 20µ" GOLD OVER NICKEL
- **34** 50µ" GOLD OVER NICKEL

3400 ⇒ 3402/3405/3410

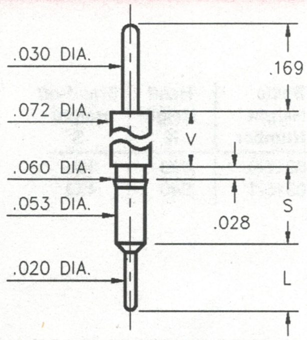
.030 DIA.
.072 DIA.
.060 DIA.
.053 DIA.
.020 DIA.
.169
V
S
.028
L

Basic Part Number	Shoulder Height V	S	L
3402-0	.052	.138	.115
3401-0	.100	.136	.115
3405-0	.169	.146	.115
3400-0	.461	.145	.115
3410-0	.934	.136	.124

34XX-X-00-XX-00-00-03-0

Press-fit in .057 mounting hole

3411

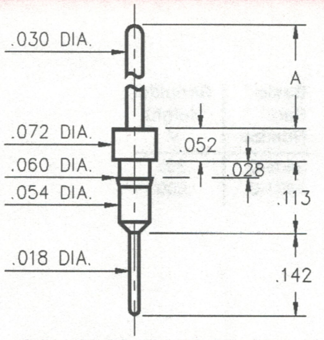
.030 DIA.
.072 DIA.
.060 DIA.
.054 DIA.
.018 DIA.
A
.052
.028
.113
.142

Basic Part Number	Pin Length A
3411-0	.417
3411-1	.217

3411-X-00-XX-00-00-03-0

Press-fit in .057 mounting hole

0600

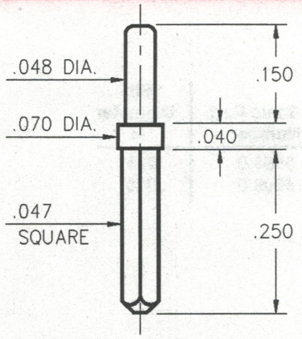
.048 DIA.
.070 DIA.
.047
SQUARE
.150
.040
.250

0600-0-05-XX-00-00-01-0

Solder mount in .052 hole

0290

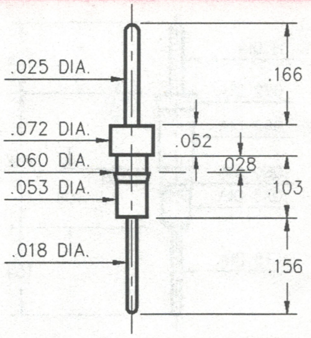
.025 DIA.
.072 DIA.
.060 DIA.
.053 DIA.
.018 DIA.
.166
.052
.028
.103
.156

0290-0-00-XX-00-00-03-0

Press-fit in .057 mounting hole

7007

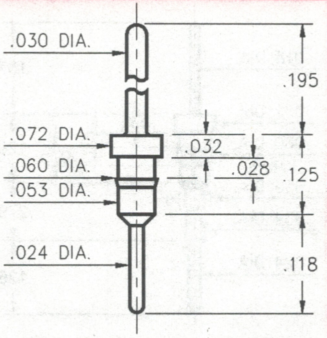
.030 DIA.
.072 DIA.
.060 DIA.
.053 DIA.
.024 DIA.
.195
.032
.028
.125
.118

7007-0-00-XX-00-00-03-0

Press-fit in .057 mounting hole

5016

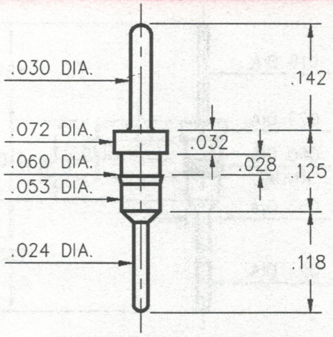
.030 DIA.
.072 DIA.
.060 DIA.
.053 DIA.
.024 DIA.
.142
.032
.028
.125
.118

5016-0-00-XX-00-00-03-0

Press-fit in .057 mounting hole

5005

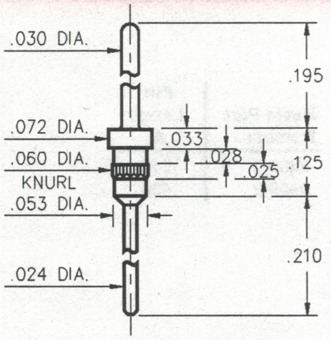
.030 DIA.
.072 DIA.
.060 DIA.
KNURL
.053 DIA.
.024 DIA.
.195
.033
.028
.025
.125
.210

5005-0-00-XX-00-00-03-0

Press-fit in .057 mounting hole

5107

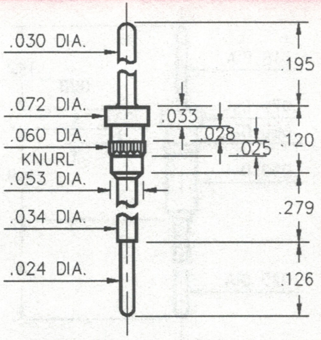
.030 DIA.
.072 DIA.
.060 DIA.
KNURL
.053 DIA.
.034 DIA.
.024 DIA.
.195
.033
.028
.025
.120
.279
.126

5107-0-00-XX-00-00-03-0

Press-fit in .057 mounting hole

5604

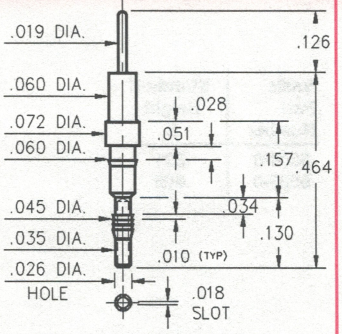
.019 DIA.
.060 DIA.
.072 DIA.
.060 DIA.
.045 DIA.
.035 DIA.
.026 DIA.
HOLE
.126
.028
.051
.157
.464
.034
.130
.010 (TYP)
.018
SLOT

5604-0-01-XX-00-00-03-0

Compliant press-fit in .040±.003 plated hole. For .060→ .100 thick board.

SPECIFICATIONS

PIN MATERIAL:
Brass Alloy 360, 1/2 Hard
(Except where noted)

DIMENSION IN INCHES
TOLERANCES ON:
LENGTHS: ± .005
DIAMETERS: ± .002
ANGLES: ± 2°

ORDER CODE: XXXX - X - 00 - XX - 00 - 00 - 0X - 0

BASIC PART #

SPECIFY PIN FINISH

01 200µ" TIN/LEAD OVER NICKEL
15 10µ" GOLD OVER NICKEL
21 20µ" GOLD OVER NICKEL
34 50µ" GOLD OVER NICKEL

PRINTED CIRCUIT PINS

3408

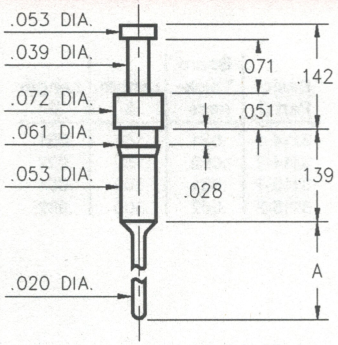
.053 DIA.
.039 DIA.
.072 DIA.
.061 DIA.
.053 DIA.
.020 DIA.
.071
.051
.028
.142
.139
A

Basic Part Number	Pin Length A
3408-1	.121
3408-2	.181

3408-X-00-XX-00-00-03-0

Press-fit in .057 mounting hole

0270/0282

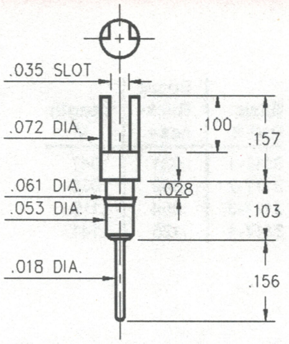
.035 SLOT
.072 DIA.
.061 DIA.
.053 DIA.
.018 DIA.
.100
.157
.028
.103
.156

Basic Part Number	Pin Material
0270-0	Ph Br 544(B2)
0282-0	Brass 360

02XX-0-01-XX-00-00-03-0

Press-fit in .057 mounting hole

0700

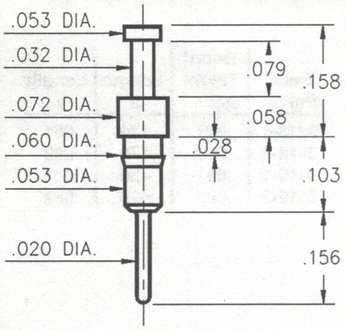
.053 DIA.
.032 DIA.
.072 DIA.
.060 DIA.
.053 DIA.
.020 DIA.
.079
.158
.058
.028
.103
.156

0700-0-00-XX-00-00-03-0

Press-fit in .057 mounting hole

0737

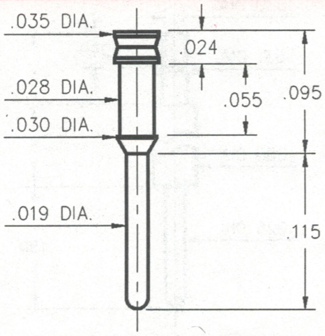
.035 DIA.
.028 DIA.
.030 DIA.
.019 DIA.
.024
.055
.095
.115

0737-0-00-XX-00-00-03-0

Press-fit in .029 mounting hole

0265

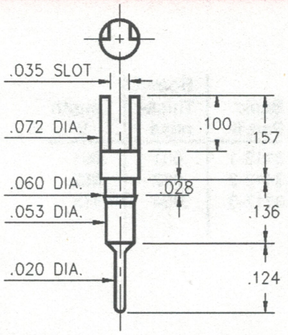
.035 SLOT
.072 DIA.
.060 DIA.
.053 DIA.
.020 DIA.
.100
.157
.028
.136
.124

0265-0-01-XX-00-00-03-0

Press-fit in .057 mounting hole

0275

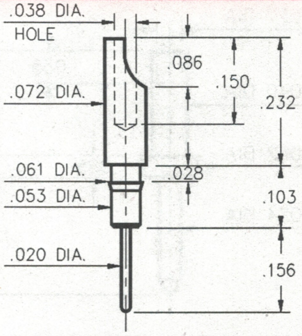
.038 DIA.
HOLE
.072 DIA.
.061 DIA.
.053 DIA.
.020 DIA.
.086
.150
.232
.028
.103
.156

0275-0-01-XX-00-00-03-0

Press-fit in .057 mounting hole

Pin material is Ph Br 544(B2)

0272

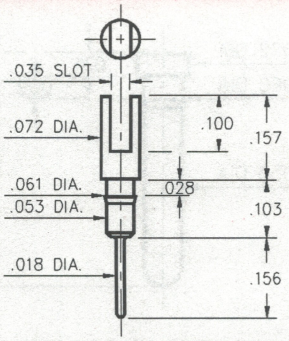
.035 SLOT
.072 DIA.
.061 DIA.
.053 DIA.
.018 DIA.
.100
.157
.028
.103
.156

0272-0-01-XX-00-00-03-0

Press-fit in .057 mounting hole

8000

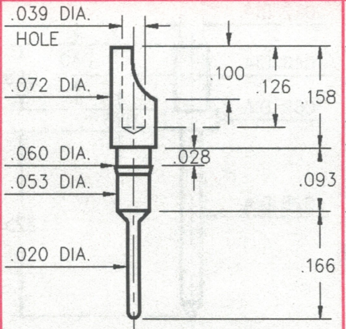
.039 DIA.
HOLE
.072 DIA.
.060 DIA.
.053 DIA.
.020 DIA.
.100
.126
.158
.028
.093
.166

8000-0-00-XX-00-00-03-0

Press-fit in .057 mounting hole

3603

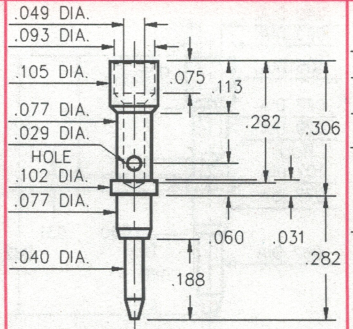
.049 DIA.
.093 DIA.
.105 DIA.
.077 DIA.
.029 DIA.
HOLE
.102 DIA.
.077 DIA.
.040 DIA.
.075
.113
.282
.306
.060
.031
.188
.282

3603-0-07-XX-00-00-08-0

Annealed

20A Crimp barrel

9976

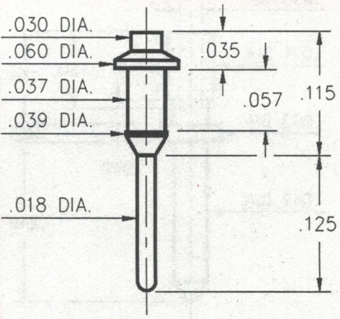
.030 DIA.
.060 DIA.
.037 DIA.
.039 DIA.
.018 DIA.
.035
.057
.115
.125

9976-0-00-XX-00-00-03-0

Press-fit in .038 mounting hole

SPECIFICATIONS

PIN MATERIAL:
Brass Alloy 360, 1/2 Hard
(Except where noted)

DIMENSION IN INCHES

TOLERANCES ON:

LENGTHS: ± .005
DIAMETERS: ± .002
ANGLES: ± 2°

ORDER CODE: XXXX - X - 00 - XX - 00 - 00 - XX - 0

BASIC PART #

SPECIFY PIN FINISH

01 200μ" TIN/LEAD OVER NICKEL
15 10μ" GOLD OVER NICKEL
21 20μ" GOLD OVER NICKEL
34 50μ" GOLD OVER NICKEL

3117

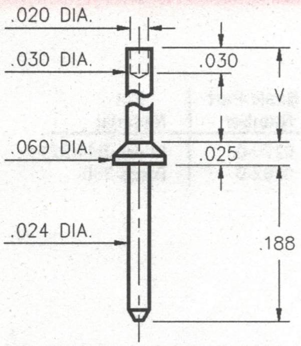
.020 DIA.
.030 DIA.
.030
V
.060 DIA.
.025
.024 DIA.
.188

Basic Part #	Board Thick-ness	Length V
3117-1	.031	.047
3117-2	.062	.078
3117-3	.094	.110
3117-4	.125	.141

3117-X-00-XX-00-00-08-0

Swage mount in .035 hole

3114/3115

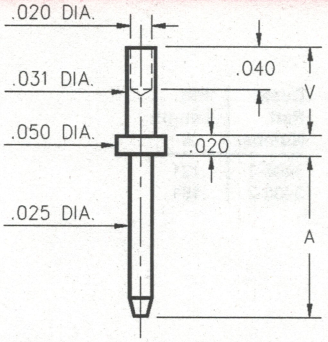
.020 DIA.
.031 DIA.
.040
V
.050 DIA.
.020
.025 DIA.
A

Basic Part #	Board Thick-ness	Length A	Length V
3114-1	.031	.150	.051
3114-2	.062	.150	.082
3115-1	.031	.300	.051
3115-2	.062	.300	.082

311X-X-01-XX-00-00-08-0

Swage mount in .035 mounting hole

3112

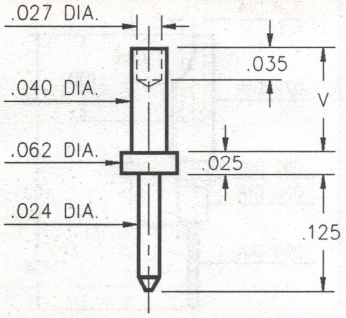
.027 DIA.
.035
.040 DIA.
V
.062 DIA.
.025
.024 DIA.
.125

Basic Part #	Board Thick-ness	Length V
3112-1	.031	.051
3112-2	.062	.082
3112-3	.094	.113

3112-X-00-XX-00-00-08-0

Swage mount in .043 hole

3118/3119

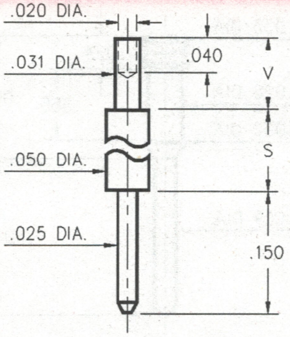
.020 DIA.
.031 DIA.
.040
V
S
.050 DIA.
.025 DIA.
.150

Basic Part #	Board Thick-ness	Length S	Length V
3118-1	.031	.170	.051
3118-2	.062	.170	.082
3119-1	.031	.420	.051
3119-2	.062	.420	.082

311X-X-00-XX-00-00-08-0

Swage mount in .035 hole

3139

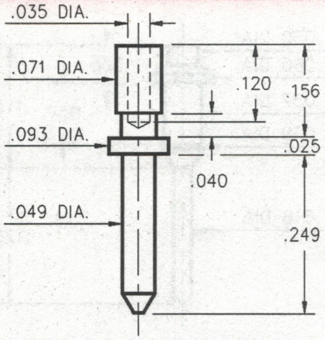
.035 DIA.
.071 DIA.
.120
.156
.093 DIA.
.025
.040
.049 DIA.
.249

3139-0-00-XX-00-00-08-0

Wire termination

3602

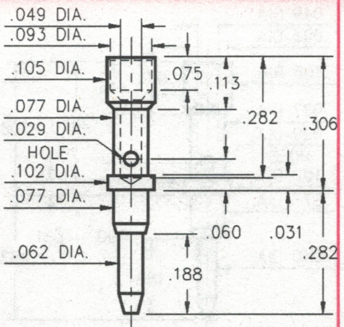
.049 DIA.
.093 DIA.
.105 DIA.
.075
.113
.077 DIA.
.282
.306
.029 DIA.
HOLE
.102 DIA.
.077 DIA.
.060
.031
.062 DIA.
.282
.188

3602-0-07-XX-00-00-08-0

Annealed

20A Crimp barrel

3131

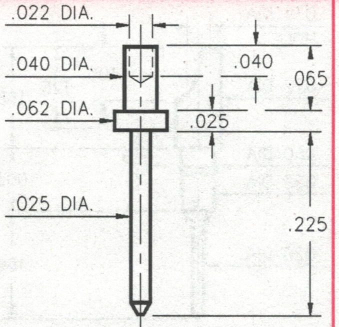
.022 DIA.
.040 DIA.
.040
.065
.062 DIA.
.025
.025 DIA.
.225

3131-1-00-XX-00-00-08-0

Swage mount in .043 hole

0912

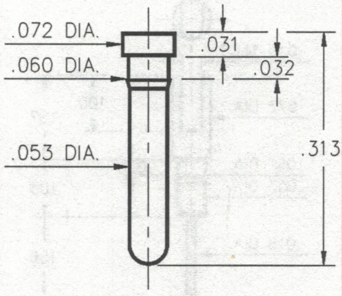
.072 DIA.
.031
.060 DIA.
.032
.053 DIA.
.313

0912-0-00-XX-00-00-03-0

Press-fit in .057 mounting hole

SPECIFICATIONS

PIN MATERIAL:
Brass Alloy 360, 1/2 Hard
(Except Swage pins which are annealed)

DIMENSION IN INCHES
TOLERANCES ON:

LENGTHS:	± .005
DIAMETERS:	± .002
ANGLES:	± 2°

ORDER CODE: XXXX - X - 00 - XX - 00 - 00 - 0X - 0

BASIC PART #

SPECIFY PIN FINISH

01 200µ" TIN/LEAD OVER NICKEL
15 10µ" GOLD OVER NICKEL
21 20µ" GOLD OVER NICKEL
34 50µ" GOLD OVER NICKEL

PRINTED CIRCUIT PINS

3130/3134/3151

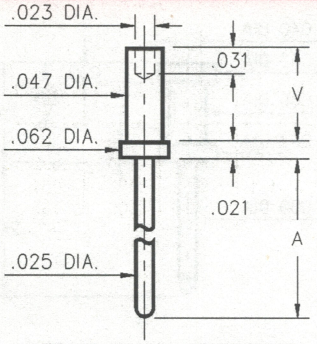
.023 DIA.
.031
.047 DIA.
V
.062 DIA.
.021
A
.025 DIA.

Basic Part #	Board Thick-ness	Length A	Length V
3134-1	.031	.079	.051
3134-2	.062	.079	.082
3134-3	.094	.079	.113
3134-4	.125	.079	.145
3130-1	.031	.179	.051
3130-2	.062	.179	.082
3130-3	.094	.179	.113
3130-4	.125	.179	.145
3151-1	.031	.479	.051
3151-2	.062	.479	.082
3151-3	.094	.479	.113
3151-4	.125	.479	.145

31XX-X-00-XX-00-00-08-0

Swage mount in .052 hole

3113

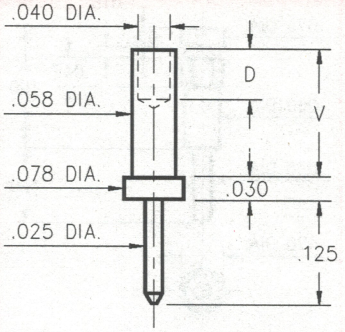
.040 DIA.
D
.058 DIA.
V
.078 DIA.
.030
.025 DIA.
.125

Basic Part #	Board Thick-ness	Length A	Depth D
3113-1	.031	.062	.040
3113-2	.062	.094	.062
3113-3	.094	.125	.062
3113-4	.125	.156	.062

3113-X-00-XX-00-00-08-0

Swage mount in .062 hole

3360

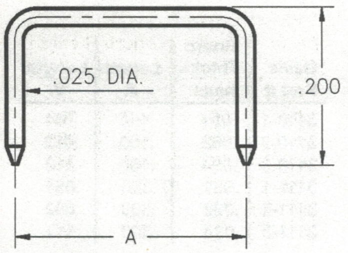
.025 DIA.
.200
A

Basic Part #	Pin Centers A
3360-1	.200
3360-2	.250
3360-3	.300
3360-4	.400
3360-5	.500

3360-X-14-XX-00-00-08-0

Shorting Jumper

3301 ⇒ 3304

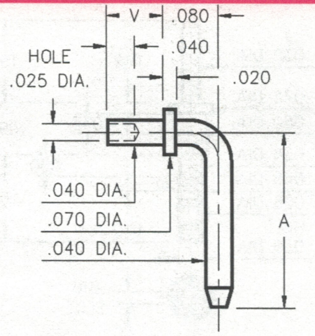
V
.080
.040
HOLE
.025 DIA.
.020
.040 DIA.
.070 DIA.
.040 DIA.
A

Basic Part #	Pin Length A
3301-X	.257
3302-X	.357
3303-X	.375
3304-X	.562

-X-	Board Thick-ness	Length V
1	.031	.051
2	.062	.082
3	.094	.113

330X-X-14-XX-00-00-08-0

Specify board thickness

Swage mount in .043 hole

0940

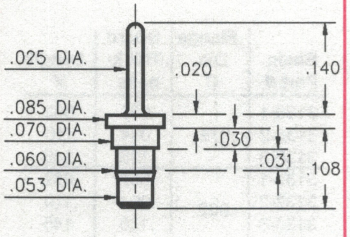
.025 DIA.
.020
.140
.085 DIA.
.070 DIA.
.030
.060 DIA.
.031
.108
.053 DIA.

0940-0-00-XX-00-00-03-0

Press-fit in .057 mounting hole

3621

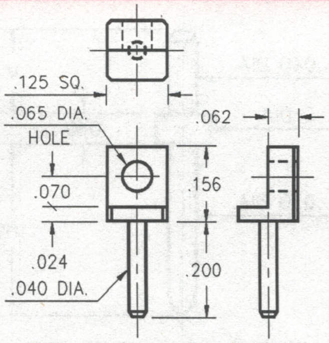
.125 SQ.
.065 DIA.
HOLE
.062
.070
.156
.024
.200
.040 DIA.

3621-0-32-XX-00-00-08-0

Board edge rivet mount

3620

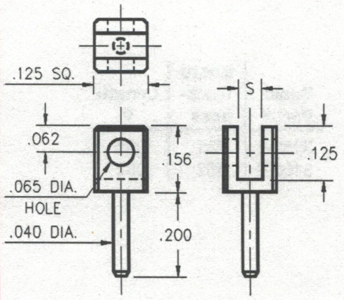
.125 SQ.
S
.062
.156
.125
.065 DIA.
HOLE
.040 DIA.
.200

Basic Part #	Board Thick-ness	Slot S
3620-1	.031	.047
3620-2	.062	.075

3620-0-32-XX-00-00-08-0

Board edge rivet mount

SPECIFICATIONS

PIN MATERIAL:

Brass Alloy 360, 1/2 Hard
(Except Swage pins which
are annealed)

DIMENSION IN INCHES

TOLERANCES ON:

LENGTHS:	± .005
DIAMETERS:	± .002
ANGLES:	± 2°

ORDER CODE: XXXX - X - 00 - XX - 00 - 00 - 0X - 0

BASIC PART #

SPECIFY PIN FINISH

- **01** 200µ" TIN/LEAD OVER NICKEL
- **15** 10µ" GOLD OVER NICKEL
- **21** 20µ" GOLD OVER NICKEL
- **34** 50µ" GOLD OVER NICKEL

3148

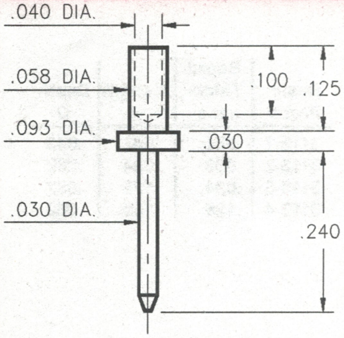
.040 DIA.
.058 DIA.
.093 DIA.
.030 DIA.
.100
.125
.030
.240

3148-3-00-XX-00-00-08-0
Swage mount in .062 hole
for .094 thick board

8815

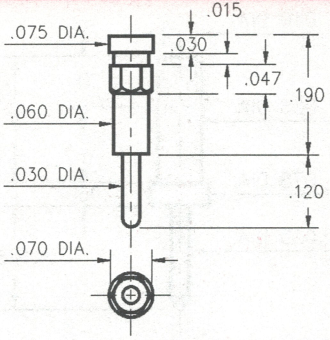
.075 DIA.
.015
.030
.047
.190
.060 DIA.
.030 DIA.
.120
.070 DIA.

8815-0-00-XX-00-00-03-0
Hex Press-fit in .065
plated thru hole

6821

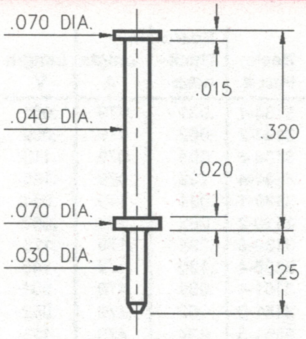
.070 DIA.
.015
.040 DIA.
.320
.020
.070 DIA.
.030 DIA.
.125

6821-0-00-XX-00-00-08-0
Wire termination

3132

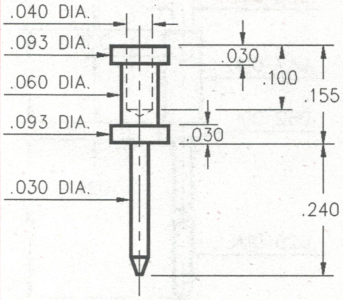
.040 DIA.
.093 DIA.
.060 DIA.
.093 DIA.
.030 DIA.
.030
.100
.155
.030
.240

3132-0-00-XX-00-00-08-0
Wire termination
Material is annealed

5601

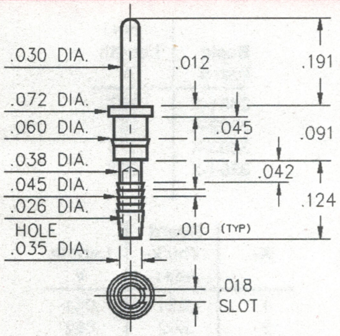
.030 DIA.
.012
.191
.072 DIA.
.060 DIA.
.045
.091
.038 DIA.
.045 DIA.
.026 DIA.
.042
.124
HOLE
.035 DIA.
.010 (TYP)
.018
SLOT

5601-0-01-XX-00-00-03-0
Compliant press-fit in .040±.003 plated
hole. For .060→ .100 thick board.

5602

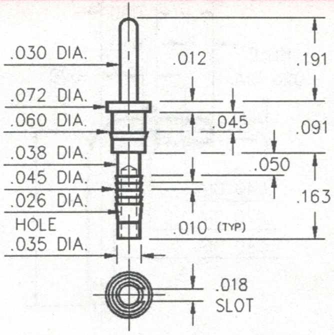
.030 DIA.
.012
.191
.072 DIA.
.060 DIA.
.045
.091
.038 DIA.
.050
.045 DIA.
.163
.026 DIA.
HOLE
.035 DIA.
.010 (TYP)
.018
SLOT

5602-0-01-XX-00-00-03-0
Compliant press-fit in .040±.003 plated
hole. For .090→ .130 thick board.

3110/3111

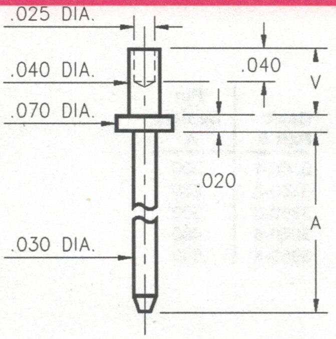
.025 DIA.
.040 DIA.
.040
V
.070 DIA.
.020
A
.030 DIA.

Basic Part #	Board Thick-ness	Length A	Length V
3110-1	.031	.150	.051
3110-2	.062	.150	.082
3110-3	.094	.150	.113
3111-1	.031	.300	.051
3111-2	.062	.300	.082
3111-3	.094	.300	.113

311X-X-00-XX-00-00-08-0
Swage mount in .043 hole

3150

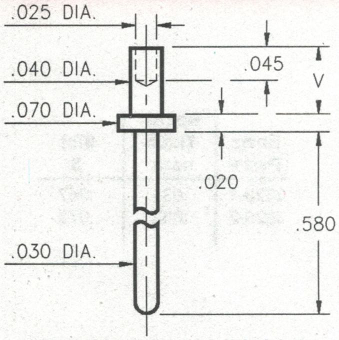
.025 DIA.
.040 DIA.
.045
V
.070 DIA.
.020
.580
.030 DIA.

Basic Part #	Board Thick-ness	Length V
3150-1	.031	.051
3150-2	.062	.082

3150-X-00-XX-00-00-08-0
Swage mount in .043 mounting hole

3136/3137

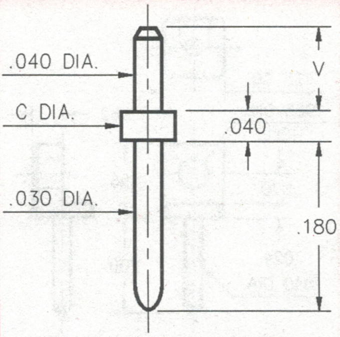
.040 DIA.
V
C DIA.
.040
.030 DIA.
.180

Basic Part #	Flange Dia. C	Board Thick-ness	Length V
3136-1		.062	.082
3136-2	.078	.094	.110
3136-3		.125	.145
3137-1		.062	.082
3137-2	.062	.094	.110
3137-3		.125	.145
3137-4		.156	.185

313X-X-00-XX-00-00-08-0
Solder mount in .043 mounting hole

SPECIFICATIONS

PIN MATERIAL:
Brass Alloy 360, 1/2 Hard
(Except Swage pins which
are annealed)

DIMENSION IN INCHES
TOLERANCES ON:

LENGTHS:	± .005
DIAMETERS:	± .002
ANGLES:	± 2°

ORDER CODE: XXXX - X - 0X - XX - 00 - 00 - 0X - 0

BASIC PART #

SPECIFY PIN FINISH

01 200µ” TIN/LEAD OVER NICKEL
15 10µ” GOLD OVER NICKEL
21 20µ” GOLD OVER NICKEL
34 50µ” GOLD OVER NICKEL

0995

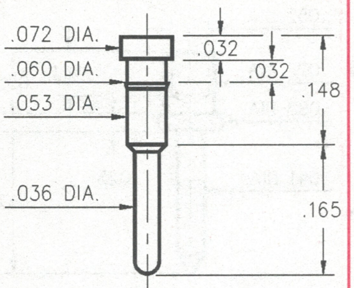
.072 DIA.
.060 DIA.
.053 DIA.
.036 DIA.
.032
.032
.148
.165

0995-0-00-XX-00-00-03-0
Press-fit in .057 mounting hole

4526

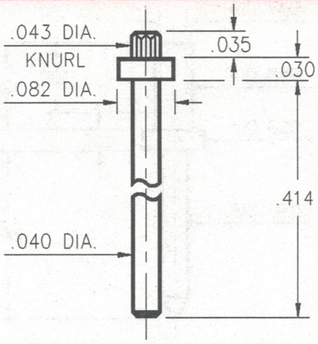
.043 DIA.
KNURL
.082 DIA.
.040 DIA.
.035
.030
.414

4526-0-00-XX-00-00-03-0
Press-fit in .040 mounting hole

0259/0286

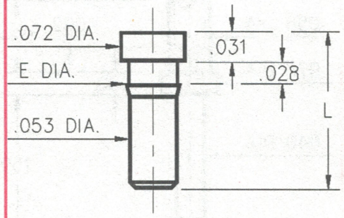
.072 DIA.
E DIA.
.053 DIA.
.031
.028
L

Basic Part #	Length L	Barb Dia. E	Mounting Hole
0259-0	.173	.062	.059
0286-0	.115	.060	.057

02XX-0-00-XX-00-00-03-0
Press-fit in .057/.059 mounting hole

3122 ⇒ 3153

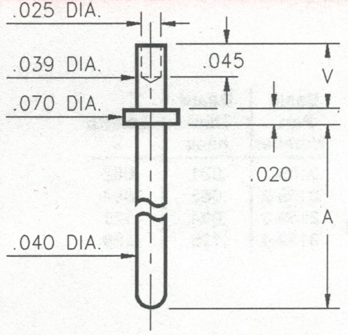
.025 DIA.
.039 DIA.
.070 DIA.
.040 DIA.
.045
V
.020
A

Basic Part #	Pin Length A
3153-X	.180
3141-X	.230
3122-X	.280
3149-X	.380
3123-X	.580
3140-X	.780
3124-X	.880

- X -	Board Thickness	Length V
1	.031	.051
2	.062	.082

31XX-X-00-XX-00-00-08-0
Swage mount in .043 hole

3101 ⇒ 3106

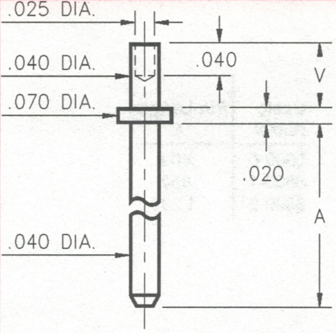
.025 DIA.
.040 DIA.
.070 DIA.
.040 DIA.
.040
V
.020
A

Basic Part #	Pin Length A
3101-X	.150
3102-X	.188
3103-X	.300
3104-X	.500
3105-X	.750
3106-X	1.000

- X -	Board Thickness	Length V
1	.031	.051
2	.062	.082
3	.094	.113

310X-X-00-XX-00-00-08-0
Swage mount in .043 hole

3221 ⇒ 3223

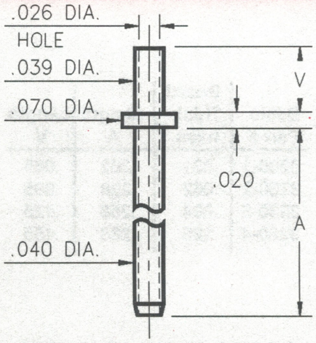
.026 DIA.
HOLE
.039 DIA.
.070 DIA.
.040 DIA.
V
.020
A

Basic Part #	Pin Length A
3221-X	.100
3222-X	.150
3223-X	.300

- X -	Board Thickness	Length V
1	.031	.051
2	.062	.082
3	.094	.113

322X-X-00-XX-00-00-08-0
Swage mount in .043 hole

3125/3126

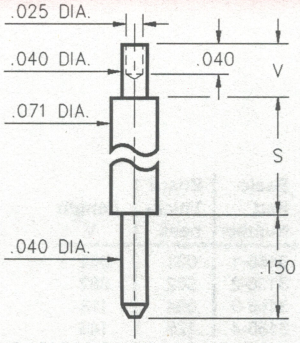
.025 DIA.
.040 DIA.
.071 DIA.
.040 DIA.
.040
V
S
.150

Basic Part #	Pin Length A
3125-X	.170
3126-X	.420

- X -	Board Thickness	Length V
1	.031	.051
2	.062	.082
3	.094	.113

312X-X-00-XX-00-00-08-0
Swage mount in .043 hole

SPECIFICATIONS

PIN MATERIAL:
Brass Alloy 360, 1/2 Hard
(Except Swage pins which
are annealed)

DIMENSION IN INCHES
TOLERANCES ON:
LENGTHS: ± .005
DIAMETERS: ± .002
ANGLES: ± 2°

ORDER CODE: XXXX - X - 0X - XX - 00 - 00 - 0X - 0

BASIC PART #

SPECIFY PIN FINISH

01 200µ" TIN/LEAD OVER NICKEL
15 10µ" GOLD OVER NICKEL
21 20µ" GOLD OVER NICKEL
34 50µ" GOLD OVER NICKEL

PRINTED CIRCUIT PINS

3146

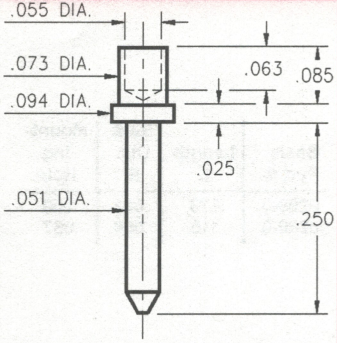
.055 DIA.
.073 DIA.
.094 DIA.
.051 DIA.
.063
.085
.025
.250

3146-2-00-XX-00-00-08-0
Swage mount in .076 hole.
For .062 thick board

3142

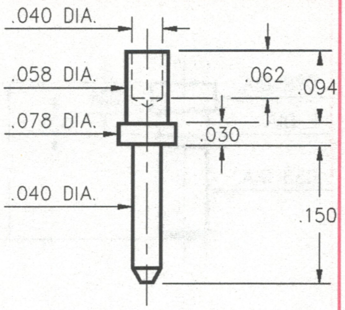
.040 DIA.
.058 DIA.
.078 DIA.
.040 DIA.
.062
.094
.030
.150

3142-2-00-XX-00-00-08-0
Swage mount in .062 hole.
For .062 thick board

3232

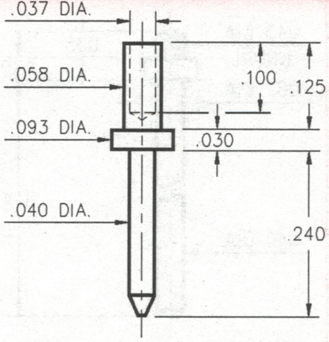
.037 DIA.
.058 DIA.
.093 DIA.
.040 DIA.
.100
.125
.030
.240

3232-3-00-XX-00-00-08-0
Swage mount in .062 hole.
For .094 thick board

3145

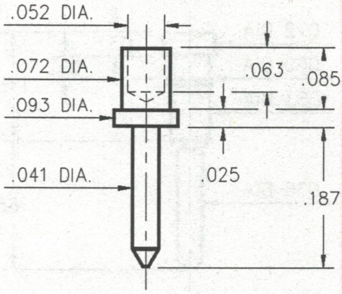
.052 DIA.
.072 DIA.
.093 DIA.
.041 DIA.
.063
.085
.025
.187

3145-2-00-XX-00-00-08-0
Swage mount in .073 hole.
For .062 thick board

8600

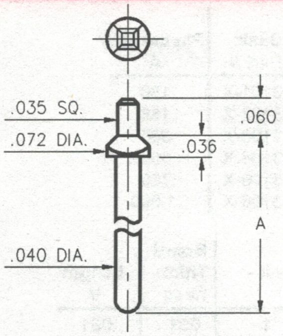
.035 SQ.
.072 DIA.
.040 DIA.
.060
.036
A

Basic Part #	Pin Length A
8600-0	.400
8600-1	.850
8600-2	1.200

8600-X-05-XX-00-00-03-0
Square press-fit in .043
plated thru hole

3159

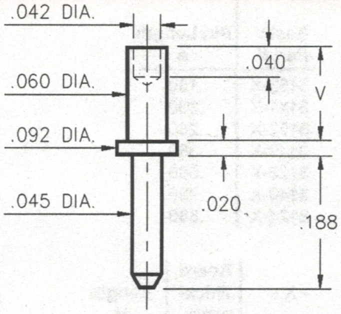
.042 DIA.
.060 DIA.
.092 DIA.
.045 DIA.
.040
V
.020
.188

Basic Part Number	Board Thick-ness	Length V
3159-1	.031	.062
3159-2	.062	.094
3159-3	.094	.125
3159-4	.125	.156

3159-X-00-XX-00-00-08-0
Swage mount in .064 hole

3156

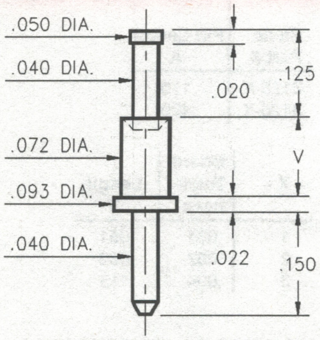
.050 DIA.
.040 DIA.
.072 DIA.
.093 DIA.
.040 DIA.
.125
.020
V
.022
.150

Basic Part Number	Board Thick-ness	Length V
3156-1	.031	.051
3156-2	.062	.082
3156-3	.094	.113
3156-4	.125	.145

3156-X-00-XX-00-00-08-0
Swage mount in .076 hole

3230

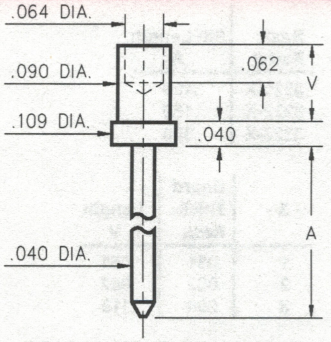
.064 DIA.
.090 DIA.
.109 DIA.
.040 DIA.
.062
V
.040
A

Basic Part #	Board Thick-ness	Length A	Length V
3230-1	.031	.202	.065
3230-2	.062	.228	.095
3230-3	.094	.258	.125
3230-4	.125	.288	.155

3230-X-00-XX-00-00-08-0
Swage mount in .094 hole

SPECIFICATIONS

PIN MATERIAL:
Brass Alloy 360, 1/2 Hard
(Except Swage pins which
are annealed)

DIMENSION IN INCHES
TOLERANCES ON:
LENGTHS: ± .005
DIAMETERS: ± .002
ANGLES: ± 2°

ORDER CODE: XXXX - X - 0X - XX - 00 - 00 - 0X - 0

BASIC PART #

SPECIFY PIN FINISH

01 200µ" TIN/LEAD OVER NICKEL
15 10µ" GOLD OVER NICKEL
21 20µ" GOLD OVER NICKEL
34 50µ" GOLD OVER NICKEL

3233

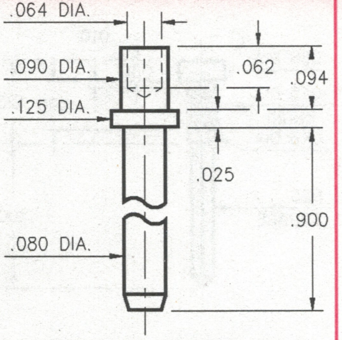
.064 DIA.
.090 DIA.
.125 DIA.
.062
.094
.025
.900
.080 DIA.

3233-2-00-XX-00-00-08-0

Swage mount in .094 hole.
For .062 thick board

0520

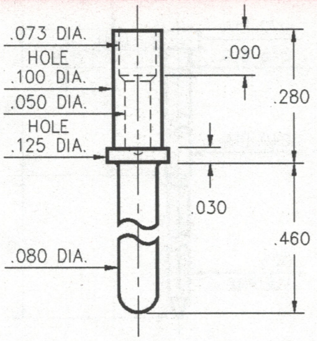
.073 DIA.
HOLE
.100 DIA.
.050 DIA.
HOLE
.125 DIA.
.090
.280
.030
.460
.080 DIA.

0520-0-00-XX-00-00-03-0

Annealed
#18 Gage crimp barrel

3231

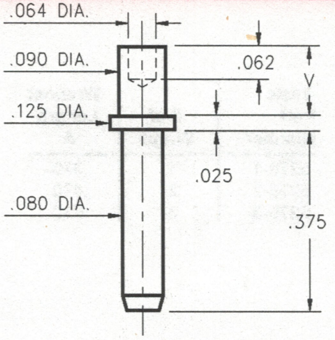
.064 DIA.
.090 DIA.
.125 DIA.
.062
V
.025
.080 DIA.
.375

Basic Part Number	Board Thick-ness	Length V
3231-2	.062	.094
3231-3	.094	.125
3231-4	.125	.156

3231-X-00-XX-00-00-08-0

Swage mount in .094 hole.

3609

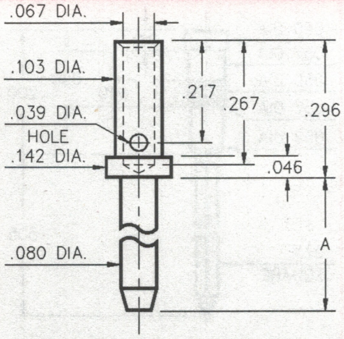
.067 DIA.
.103 DIA.
.039 DIA.
HOLE
.142 DIA.
.217
.267
.296
.046
A
.080 DIA.

Basic Part #	Pin Length A
3609-1	.200
3609-2	.375
3609-3	.500

3609-X-07-XX-00-00-08-0

16A Crimp barrel

3601

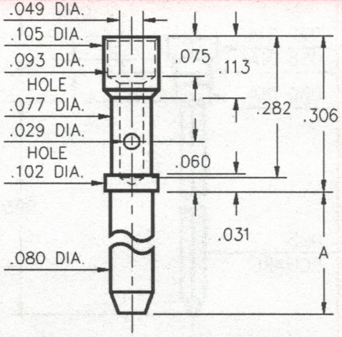
.049 DIA.
.105 DIA.
.093 DIA.
HOLE
.077 DIA.
.029 DIA.
HOLE
.102 DIA.
.075
.113
.282
.306
.060
.031
A
.080 DIA.

Basic Part #	Pin Length A
3601-1	.200
3601-2	.375
3601-3	.500

3601-X-07-XX-00-00-08-0

#20A Crimp barrel

3133/3138/3152

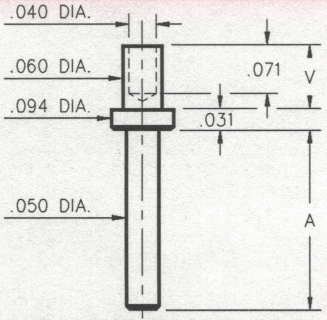
.040 DIA.
.060 DIA.
.071
V
.094 DIA.
.031
.050 DIA.
A

Basic Part #	Pin Length A
3152-X	.094
3133-X	.219
3138-X	.282

- X -	Board Thick-ness	Length V
1	.031	.063
2	.062	.094
3	.094	.125
4	.125	.156

31XX-X-00-XX-00-00-08-0

Specify board thickness
Swage mount in .064 hole

3144

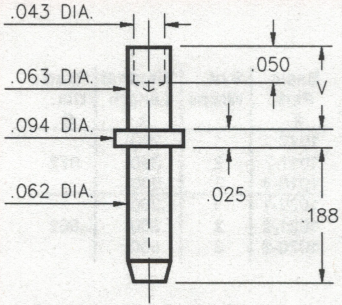
.043 DIA.
.063 DIA.
.050
V
.094 DIA.
.062 DIA.
.025
.188

Basic Part Number	Board Thick-ness	Length V
3144-1	.031	.053
3144-2	.062	.084
3144-3	.094	.115

3144-X-00-XX-00-00-08-0

Swage mount in .067 hole.

SPECIFICATIONS

PIN MATERIAL:
Brass Alloy 360, 1/2 Hard
(Except Swage pins which
are annealed)

DIMENSION IN INCHES
TOLERANCES ON:
LENGTHS: ± .005
DIAMETERS: ± .002
ANGLES: ± 2°

ORDER CODE: XXXX - X - 0X - XX - 00 - 00 - 0X - 0

BASIC PART # →

SPECIFY PIN FINISH

01 200µ" TIN/LEAD OVER NICKEL
15 10µ" GOLD OVER NICKEL
21 20µ" GOLD OVER NICKEL
34 50µ" GOLD OVER NICKEL

WRAPOST TERMINALS

5275

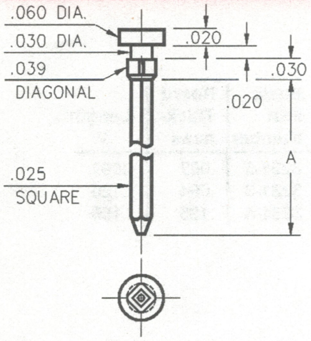
.060 DIA.
.030 DIA.
.039
DIAGONAL
.020
.030
.020
A
.025
SQUARE

Basic Part Number	# of Wraps	Wrapost Length A
5275-1	1	.370
5275-2	2	.470
5275-3	3	.610

5275-X-05-XX-00-00-01-0
Square press-fit in .035
plated thru hole

1215

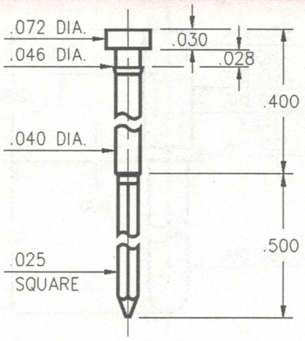
.072 DIA.
.046 DIA.
.030
.028
.400
.040 DIA.
.500
.025
SQUARE

1215-3-05-XX-00-00-01-0
Press-fit in .042 mounting hole

1124

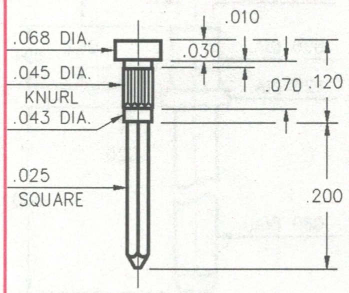
.010
.068 DIA.
.030
.045 DIA.
KNURL
.070
.120
.043 DIA.
.025
SQUARE
.200

1124-0-05-XX-00-00-01-0
Press-fit in .043 mounting hole

1210

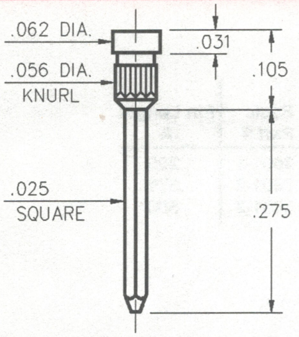
.062 DIA.
.031
.056 DIA.
KNURL
.105
.025
SQUARE
.275

1210-0-05-XX-00-00-01-0
Press-fit in .052 mounting hole

1222

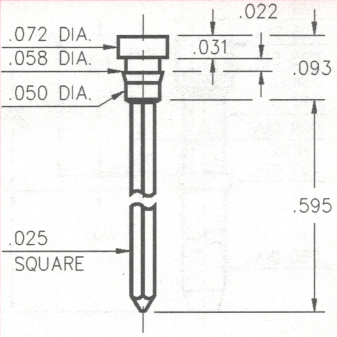
.022
.072 DIA.
.031
.058 DIA.
.093
.050 DIA.
.595
.025
SQUARE

1222-0-05-XX-00-00-01-0
Press-fit in .053 mounting hole

1221

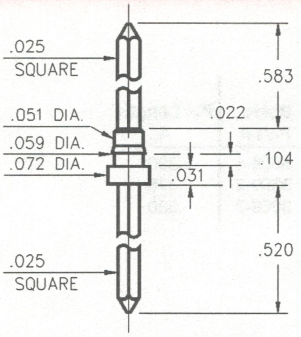
.025
SQUARE
.583
.051 DIA.
.022
.059 DIA.
.072 DIA.
.104
.031
.520
.025
SQUARE

1221-0-05-XX-00-00-01-0
Press-fit in .053 mounting hole

1110

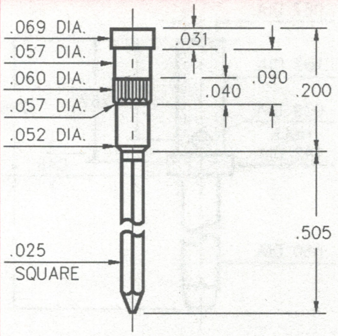
.069 DIA.
.031
.057 DIA.
.060 DIA.
.040
.090
.200
.057 DIA.
.052 DIA.
.505
.025
SQUARE

1110-3-05-XX-00-00-01-0
Press-fit in .056 mounting hole

1010 ⇒ 1012/1020 ⇒ 1022

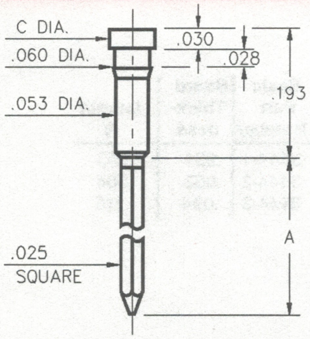
C DIA.
.030
.060 DIA.
.028
.193
.053 DIA.
A
.025
SQUARE

Basic Part #	# of Wraps	Wraptost Length A	Head Dia. C
1012-1	1	.260	.072
1011-2	2	.360	
1010-3	3	.500	
1022-1	1	.260	.062
1021-2	2	.360	
1020-3	3	.500	

10XX-X-05-XX-00-00-01-0
Press-fit in .056 mounting hole

1094

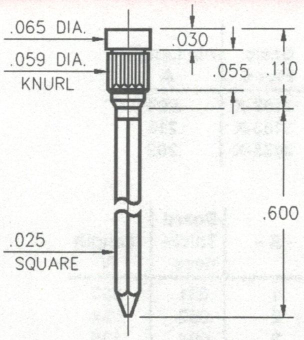
.065 DIA.
.030
.059 DIA.
KNURL
.055
.110
.600
.025
SQUARE

1094-0-05-XX-00-00-01-0
Press-fit in .056 mounting hole

SPECIFICATIONS

WRAPOST MATERIAL:
Brass Alloy 360, 1/2 Hard

DIMENSION IN INCHES
TOLERANCES ON:
LENGTHS: ± .005
DIAMETERS: ± .002
ANGLES: ± 2°

ORDER CODE: XXXX - X - 05 - XX - 00 - 00 - 01 - 0

BASIC PART #

SPECIFY WRAPOST FINISH

01 200µ" TIN/LEAD OVER NICKEL
15 10µ" GOLD OVER NICKEL
21 20µ" GOLD OVER NICKEL

WRAPOST TERMINALS

1030 ⇒ 1032

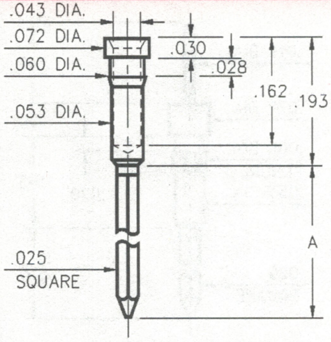
.043 DIA.
.072 DIA.
.060 DIA.
.053 DIA.
.030
.028
.162
.193
A
.025
SQUARE

Basic Part Number	# of Wraps	Wrapost Length A
1032-1	1	.260
1031-2	2	.360
1030-3	3	.500

103X-X-05-XX-00-00-01-0
Press-fit in .056 mounting hole

1216

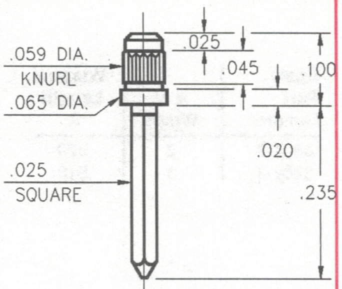
.059 DIA.
KNURL
.065 DIA.
.025
.045
.100
.020
.025
SQUARE
.235

1216-0-05-XX-00-00-01-0
Press-fit in .055 mounting hole

1095

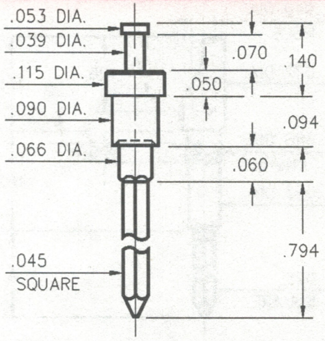
.053 DIA.
.039 DIA.
.115 DIA.
.090 DIA.
.066 DIA.
.070
.140
.050
.094
.060
.794
.045
SQUARE

1095-0-05-XX-00-00-01-0
Swage mount in .094 hole
For .062 thick board

1214

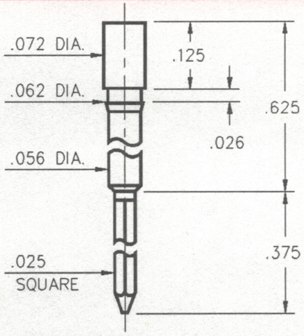
.072 DIA.
.062 DIA.
.056 DIA.
.125
.625
.026
.375
.025
SQUARE

1214-0-05-XX-00-00-01-0
Press-fit in .057 mounting hole

1212

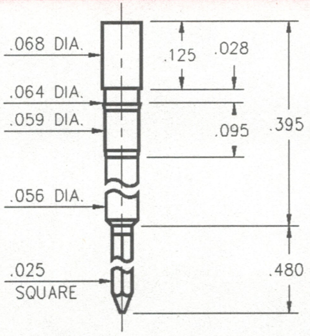
.068 DIA.
.064 DIA.
.059 DIA.
.056 DIA.
.125
.028
.095
.395
.480
.025
SQUARE

1212-0-05-XX-00-00-01-0
Press-fit in .060 mounting hole

1213

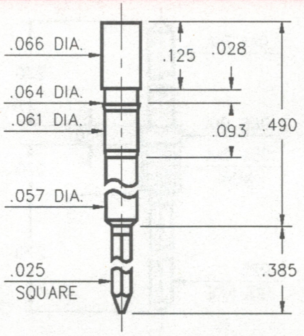
.066 DIA.
.064 DIA.
.061 DIA.
.057 DIA.
.125
.028
.093
.490
.385
.025
SQUARE

1213-0-05-XX-00-00-01-0
Press-fit in .060 mounting hole

0318

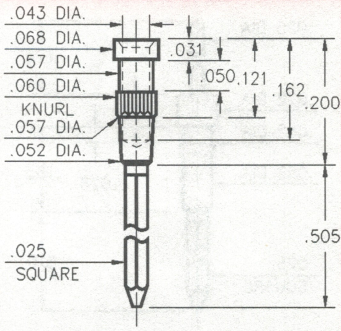
.043 DIA.
.068 DIA.
.057 DIA.
.060 DIA.
KNURL
.057 DIA.
.052 DIA.
.031
.050
.121
.162
.200
.505
.025
SQUARE

0318-3-05-XX-00-00-01-0
Press-fit in .056 mounting hole

1302

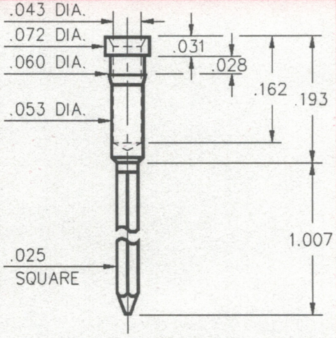
.043 DIA.
.072 DIA.
.060 DIA.
.053 DIA.
.031
.028
.162
.193
1.007
.025
SQUARE

1302-0-05-XX-00-00-01-0
Press-fit in .056 mounting hole

1097

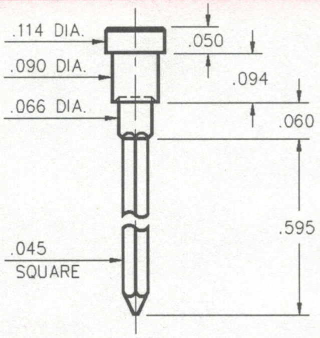
.114 DIA.
.090 DIA.
.066 DIA.
.050
.094
.060
.595
.045
SQUARE

1097-0-05-XX-00-00-01-0
Swage mount in .094 hole
for .062 thick board

SPECIFICATIONS

WRAPOST MATERIAL:
Brass Alloy 360, 1/2 Hard
(Except swage pins which
are annealed)

DIMENSION IN INCHES
TOLERANCES ON:

LENGTHS:	± .005
DIAMETERS:	± .002
ANGLES:	± 2°

ORDER CODE: XXXX - X - 05 - XX - 00 - 00 - 01 - 0

BASIC PART #

SPECIFY WRAPOST FINISH

01 200µ" TIN/LEAD OVER NICKEL
15 10µ" GOLD OVER NICKEL
21 20µ" GOLD OVER NICKEL

WRAPOST TERMINALS

8301

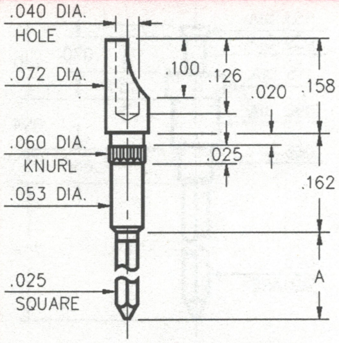

.040 DIA.
HOLE
.072 DIA.
.100
.126
.020
.158
.060 DIA.
KNURL
.025
.053 DIA.
.162
.025
SQUARE
A

8301-X-24-XX-00-00-01-0

Press-fit in .057 mounting hole

Basic Part Number	# of Wraps	Wrapost Length A
8301-2	2	.370
8301-3	3	.510

1083

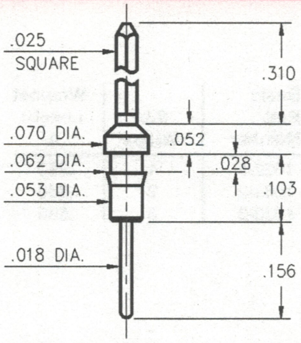

.025
SQUARE
.310
.070 DIA.
.052
.062 DIA.
.028
.053 DIA.
.103
.018 DIA.
.156

1083-0-05-XX-00-00-01-0

Press-fit in .059 mounting hole

5301

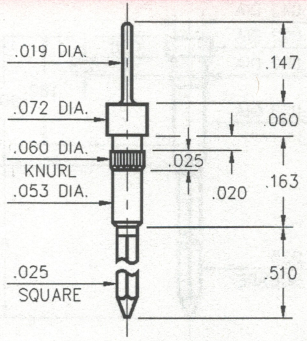

.019 DIA.
.147
.072 DIA.
.060
.060 DIA.
KNURL
.025
.053 DIA.
.020
.163
.025
SQUARE
.510

5301-0-05-XX-00-00-01-0

Press-fit in .057 mounting hole

1090

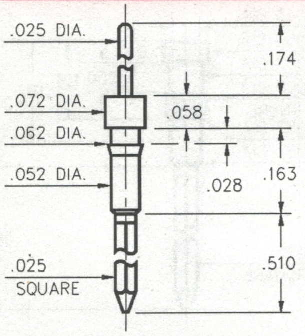

.025 DIA.
.174
.072 DIA.
.058
.062 DIA.
.052 DIA.
.028
.163
.025
SQUARE
.510

1090-0-05-XX-00-00-01-0

Press-fit in .059 mounting hole

8608

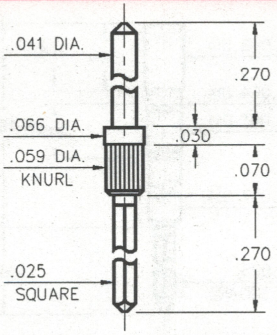

.041 DIA.
.270
.066 DIA.
.030
.059 DIA.
KNURL
.070
.025
SQUARE
.270

8608-0-05-XX-00-00-01-0

Press-fit in .056 mounting hole

SPECIFICATIONS

WRAPOST MATERIAL:
Brass Alloy 360, 1/2 Hard

DIMENSION IN INCHES
TOLERANCES ON:
LENGTHS: ± .005
DIAMETERS: ± .002
ANGLES: ± 2°

ORDER CODE: XXXX - X - XX - XX - 00 - 00 - 01 - 0

BASIC PART #

SPECIFY WRAPOST FINISH

01 200í” TIN/LEAD OVER NICKEL
15 10í” GOLD OVER NICKEL
21 20í” GOLD OVER NICKEL

WRAPOST TERMINALS

1096

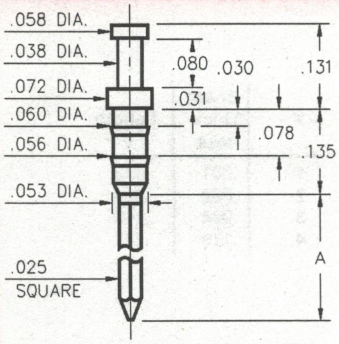
.058 DIA.
.038 DIA.
.072 DIA.
.060 DIA.
.056 DIA.
.053 DIA.
.025
SQUARE
.080
.030
.131
.031
.078
.135
A

Basic Part Number	# of Wraps	Wrapost Length A
1096-2	2	.381
1096-3	3	.527

1096-X-05-XX-00-00-01-0

Press-fit in .057 mounting hole

1106

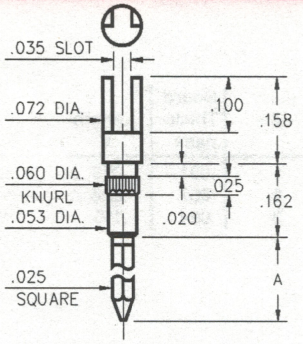
.035 SLOT
.072 DIA.
.060 DIA.
KNURL
.053 DIA.
.025
SQUARE
.100
.158
.025
.020
.162
A

Basic Part Number	# of Wraps	Wrapost Length A
1106-2	2	.370
1106-3	3	.510

1106-X-23-XX-00-00-01-0

Press-fit in .057 mounting hole

1093

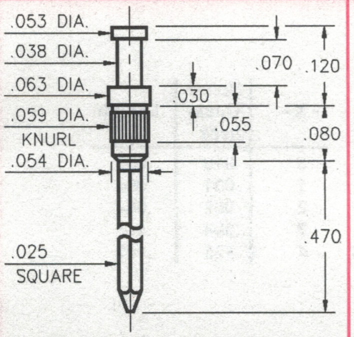
.053 DIA.
.038 DIA.
.063 DIA.
.059 DIA.
KNURL
.054 DIA.
.025
SQUARE
.070
.120
.030
.055
.080
.470

1093-0-05-XX-00-00-01-0

Press-fit in .056 mounting hole

0730

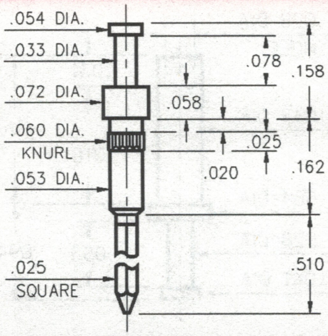
.054 DIA.
.033 DIA.
.072 DIA.
.060 DIA.
KNURL
.053 DIA.
.025
SQUARE
.078
.158
.058
.025
.020
.162
.510

0730-3-05-XX-00-00-01-0

Press-fit in .057 mounting hole

1122

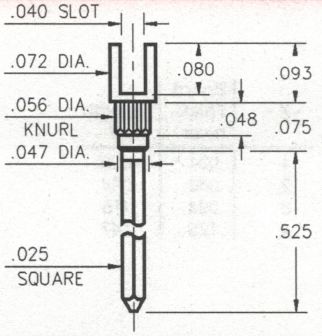
.040 SLOT
.072 DIA.
.056 DIA.
KNURL
.047 DIA.
.025
SQUARE
.080
.093
.048
.075
.525

1122-0-23-XX-00-00-01-0

Press-fit in .052 mounting hole

1064

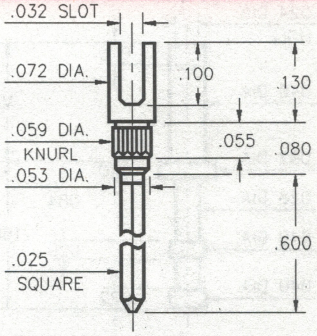
.032 SLOT
.072 DIA.
.059 DIA.
KNURL
.053 DIA.
.025
SQUARE
.100
.130
.055
.080
.600

1064-0-23-XX-00-00-01-0

Press-fit in .057 mounting hole

1092

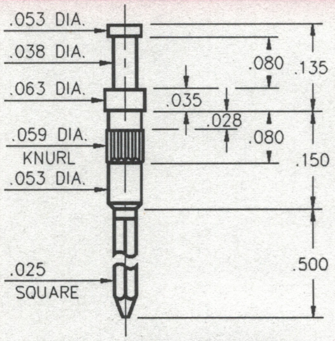
.053 DIA.
.038 DIA.
.063 DIA.
.059 DIA.
KNURL
.053 DIA.
.025
SQUARE
.080
.135
.035
.028
.080
.150
.500

1092-0-05-XX-00-00-01-0

Press-fit in .056 mounting hole

1068

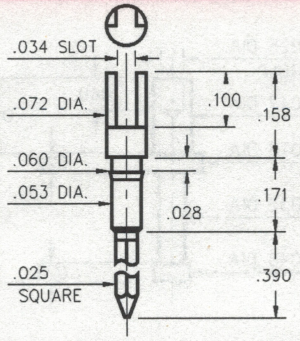
.034 SLOT
.072 DIA.
.060 DIA.
.053 DIA.
.025
SQUARE
.100
.158
.171
.028
.390

1068-0-23-XX-00-00-01-0

Press-fit in .057 mounting hole

1070 ⇒ 1072

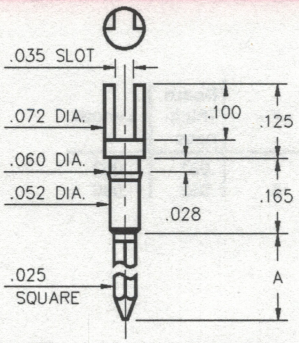
.035 SLOT
.072 DIA.
.060 DIA.
.052 DIA.
.025
SQUARE
.100
.125
.028
.165
A

Basic Part Number	# of Wraps	Wrapost Length A
1072-1	1	.260
1071-2	2	.360
1070-3	3	.510

107X-X-23-XX-00-00-01-0

Press-fit in .057 mounting hole

SPECIFICATIONS

WRAPOST MATERIAL:
Brass Alloy 360, 1/2 Hard

DIMENSION IN INCHES
TOLERANCES ON:
LENGTHS: ± .005
DIAMETERS: ± .002
ANGLES: ± 2°

ORDER CODE: XXXX - X - XX - XX - 00 - 00 - 01 - 0

BASIC PART #

SPECIFY WRAPOST FINISH

01 200µ” TIN/LEAD OVER NICKEL
15 10µ” GOLD OVER NICKEL
21 20µ” GOLD OVER NICKEL

SOLDER TERMINALS
TURRETS

2111

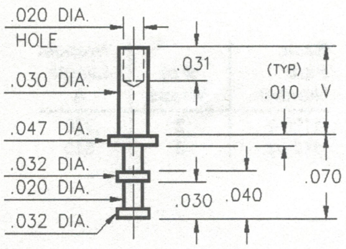
.020 DIA.
HOLE
.030 DIA.
.047 DIA.
.032 DIA.
.020 DIA.
.032 DIA.
.031
(TYP)
.010
V
.070
.030
.040

- X -	Board Thick-ness	Length V
1	.031	.053
2	.062	.084
3	.094	.115

2111-X-00-XX-00-00-07-0

Swage mount in .033 hole

2113

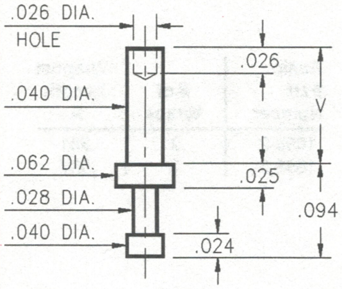
.026 DIA.
HOLE
.040 DIA.
.062 DIA.
.028 DIA.
.040 DIA.
.026
V
.025
.094
.024

- X -	Board Thick-ness	Length V
1	.031	.053
2	.062	.084
3	.094	.115
4	.125	.147

2113-X-00-XX-00-00-07-0

Swage mount in .043 hole

2108

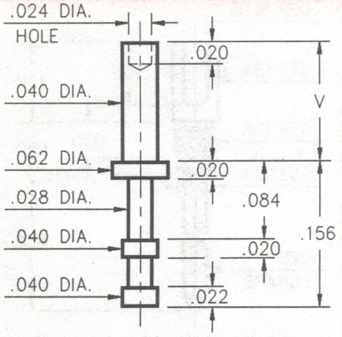
.024 DIA.
HOLE
.040 DIA.
.062 DIA.
.028 DIA.
.040 DIA.
.040 DIA.
.020
V
.020
.084
.020
.156
.022

- X -	Board Thick-ness	Length V
1	.031	.053
2	.062	.084
3	.094	.115
4	.125	.147

2108-X-00-XX-00-00-07-0

Swage mount in .043 hole

2102

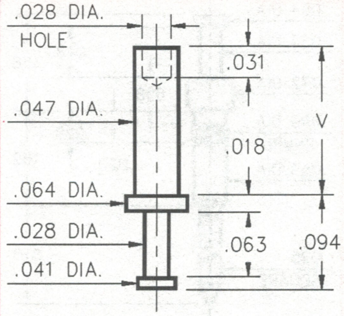
.028 DIA.
HOLE
.047 DIA.
.064 DIA.
.028 DIA.
.041 DIA.
.031
V
.018
.063
.094

- X -	Board Thick-ness	Length V
5	.016	.035
1	.031	.054
2	.062	.084
3	.094	.115
4	.125	.147

2102-X-00-XX-00-00-07-0

Swage mount in .052 hole

2109

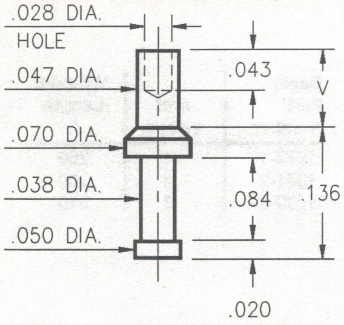
.028 DIA.
HOLE
.047 DIA.
.070 DIA.
.038 DIA.
.050 DIA.
.043
V
.084
.136
.020

- X -	Board Thick-ness	Length V
1	.031	.052
2	.062	.085

2109-X-00-XX-00-00-07-0

Swage mount in .052 hole

2324

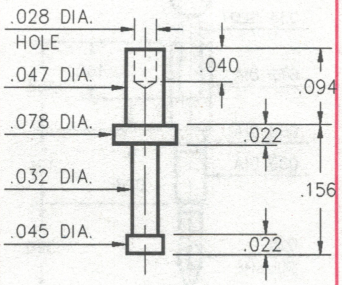
.028 DIA.
HOLE
.047 DIA.
.078 DIA.
.032 DIA.
.045 DIA.
.040
.094
.022
.156
.022

2324-2-00-XX-00-00-07-0

Swage mount in .052 hole
For .062 thick board

SPECIFICATIONS

PIN MATERIAL:
Brass Alloy 360, 1/2 Hard
Swage pins are annealed

DIMENSION IN INCHES
TOLERANCES ON:
LENGTHS: ± .005
DIAMETERS: ± .002
ANGLES: ± 2°

ORDER CODE: 2XXX - X - 00 - XX - 00 - 00 - 07 - 0

BASIC PART #

SPECIFY PIN FINISH

01 200μ” TIN/LEAD OVER NICKEL
44 300μ” SILVER OVER 100μ” COPPER
50 300μ” ELECTRO-SOLDER (60/40)
OVER 100μ” COPPER

SOLDER TERMINALS
TURRETS

2110

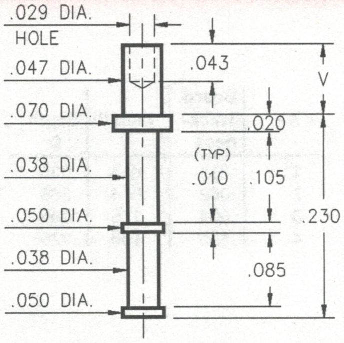
.029 DIA.
HOLE
.047 DIA.
.070 DIA.
.038 DIA.
.050 DIA.
.038 DIA.
.050 DIA.
.043
.020
(TYP)
.010
.105
.085
.230
V

- X -	Board Thick-ness	Length V
1	.031	.049
2	.062	.082

2110-X-00-XX-00-00-07-0

Swage mount in .052 hole

2333

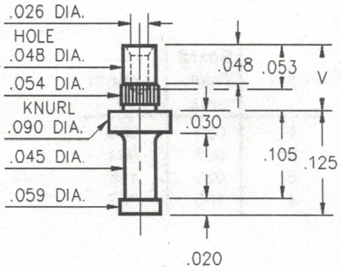
.026 DIA.
HOLE
.048 DIA.
.054 DIA.
KNURL
.090 DIA.
.045 DIA.
.059 DIA.
.048
.053
V
.030
.105
.125
.020

- X -	Board Thick-ness	Length V
1	.078	.103
2	.062	.087
3	.047	.072

2333-X-00-XX-00-00-07-0

Press-fit and swage in .052 mounting hole

2821

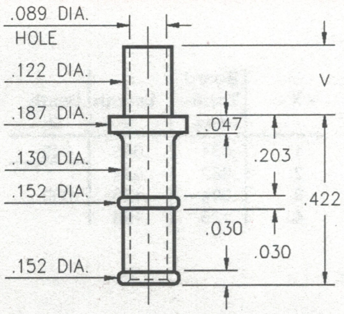
.089 DIA.
HOLE
.122 DIA.
.187 DIA.
.130 DIA.
.152 DIA.
.152 DIA.
V
.047
.203
.422
.030
.030

- X -	Board Thick-ness	Length V
2	.062	.109
3	.094	.141
4	.125	.172

2821-X-00-XX-00-00-07-0

Swage mount in .125 hole

2533

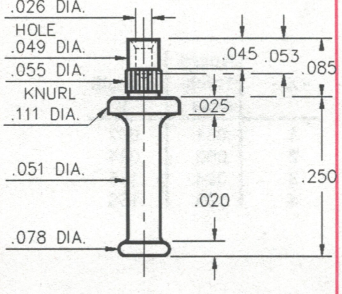
.026 DIA.
HOLE
.049 DIA.
.055 DIA.
KNURL
.111 DIA.
.051 DIA.
.078 DIA.
.045
.053
.085
.025
.250
.020

2533-0-00-XX-00-00-07-0

Press-fit & swage in .052 mtg. hole. For .062 thick board

2101

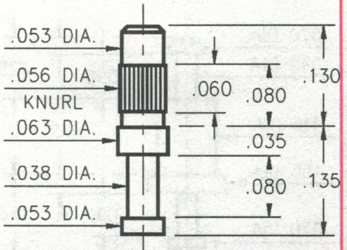
.053 DIA.
.056 DIA.
KNURL
.063 DIA.
.038 DIA.
.053 DIA.
.060
.080
.130
.035
.080
.135

2101-3-00-XX-00-00-07-0

Press-fit in .052 mtg. hole. For .062 to .094 thick board

2316/2317/2708

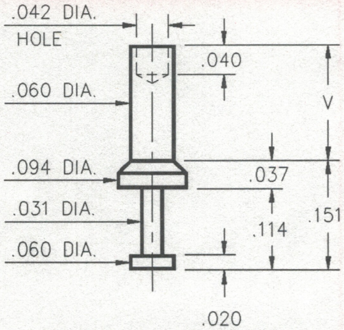
.042 DIA.
HOLE
.060 DIA.
.094 DIA.
.031 DIA.
.060 DIA.
.040
V
.037
.114
.151
.020

2316-X-00-XX-00-00-07-0

Swage mount in .064 hole

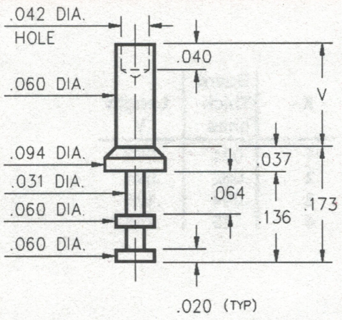
.042 DIA.
HOLE
.060 DIA.
.094 DIA.
.031 DIA.
.060 DIA.
.060 DIA.
.040
V
.037
.064
.136
.173
.020 (TYP)

2317-X-00-XX-00-00-07-0

Swage mount in .064 hole

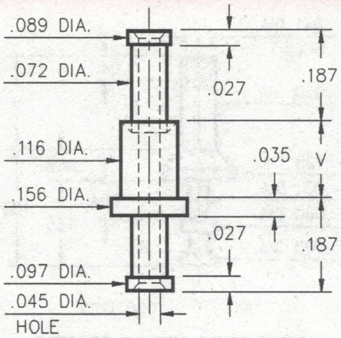
.089 DIA.
.072 DIA.
.116 DIA.
.156 DIA.
.097 DIA.
.045 DIA.
HOLE
.027
.187
.035
V
.027
.187

2708-X-00-XX-00-00-07-0

Swage mount in .120 hole

- X -	Board Thick-ness	Length V
1	.031	.062
2	.062	.094
3	.094	.125
4	.125	.156

SPECIFICATIONS

PIN MATERIAL:
Brass Alloy 360, 1/2 Hard
Swage pins are annealed

DIMENSION IN INCHES
TOLERANCES ON:

LENGTHS:	± .005
DIAMETERS:	± .002
ANGLES:	± 2°

ORDER CODE: 2XXX - X - 00 - XX - 00 - 00 - 07 - 0

BASIC PART #

SPECIFY PIN FINISH

01 200μ" TIN/LEAD OVER NICKEL
44 300μ" SILVER OVER 100μ" COPPER
50 300μ" ELECTRO-SOLDER (60/40) OVER 100μ" COPPER

SOLDER TERMINALS
TURRETS

2312

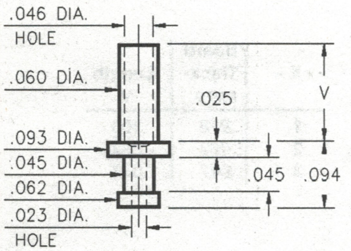
.046 DIA.
HOLE
.060 DIA.
.093 DIA.
.045 DIA.
.062 DIA.
.023 DIA.
HOLE
.025
V
.045
.094

- X -	Board Thick- ness	Length V
1	.031	.053
2	.062	.094
3	.094	.115
4	.125	.147

2312-X-00-XX-00-00-07-0

Swage mount in .064 hole

2308

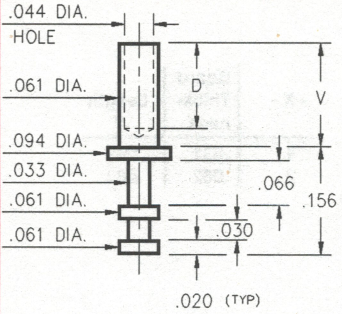
.044 DIA.
HOLE
.061 DIA.
.094 DIA.
.033 DIA.
.061 DIA.
.061 DIA.
D
V
.066
.156
.030
.020 (TYP)

- X -	Board Thick- ness	Length V	Depth D
1	.031	.054	.036
2	.062	.084	.066
3	.094	.125	.096
4	.125	.156	.126

2308-X-00-XX-00-00-07-0

Swage in .064 mount hole

2707

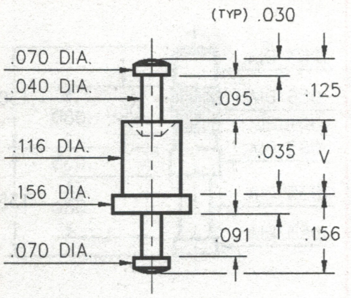
(TYP) .030
.070 DIA.
.040 DIA.
.116 DIA.
.156 DIA.
.070 DIA.
.095
.125
.035
V
.091
.156

- X -	Board Thick- ness	Length V
1	.031	.062
2	.062	.094
3	.094	.125
4	.125	.156

2707-X-00-XX-00-00-07-0

Swage mount in .120 hole

2329

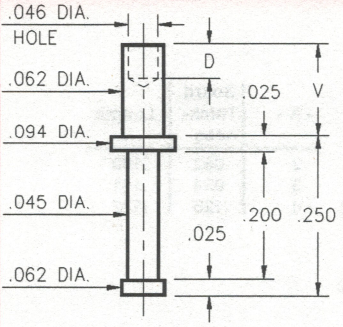
.046 DIA.
HOLE
.062 DIA.
.094 DIA.
.045 DIA.
.062 DIA.
D
.025
V
.200
.250
.025

- X -	Board Thick- ness	Length V	Depth D
1	.031	.045	.045
2	.062	.094	
3	.094	.125	.062
4	.125	.156	

2329-X-00-XX-00-00-07-0

Swage mount in .067 hole

2510/2513

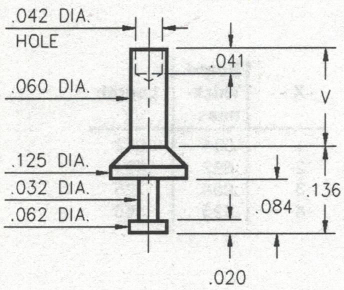
.042 DIA.
HOLE
.060 DIA.
.125 DIA.
.032 DIA.
.062 DIA.
.041
V
.136
.084
.020

2510-X-00-XX-00-00-07-0

Swage mount in .064 hole

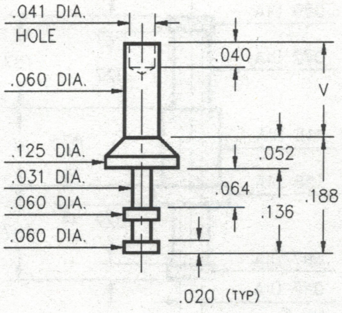
.041 DIA.
HOLE
.060 DIA.
.125 DIA.
.031 DIA.
.060 DIA.
.060 DIA.
.040
V
.052
.064
.136
.188
.020 (TYP)

2513-X-00-XX-00-00-07-0

Swage mount in .064 hole

- X -	Board Thick- ness	Length V
1	.031	.062
2	.062	.094
3	.094	.125
4	.125	.156

SPECIFICATIONS

PIN MATERIAL:
Brass Alloy 360, 1/2 Hard
Swage pins are annealed

DIMENSION IN INCHES
TOLERANCES ON:
LENGTHS: ± .005
DIAMETERS: ± .002
ANGLES: ± 2°

ORDER CODE: 2XXX - X - 00 - XX - 00 - 00 - 07 - 0

BASIC PART #

SPECIFY PIN FINISH

01 200μ" TIN/LEAD OVER NICKEL
44 300μ" SILVER OVER 100μ" COPPER
50 300μ" ELECTRO-SOLDER (60/40)
OVER 100μ" COPPER

SOLDER TERMINALS
TURRETS

2348/2301/2506

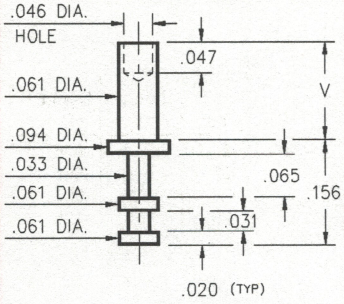
.046 DIA.
HOLE
.061 DIA.
.094 DIA.
.033 DIA.
.061 DIA.
.061 DIA.
.047
V
.065
.156
.031
.020 (TYP)

2348-X-00-XX-00-00-07-0
Swage mount in .064 hole

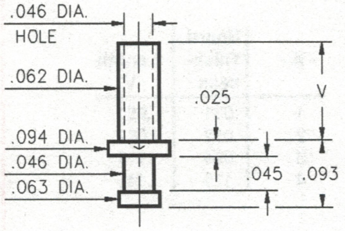
.046 DIA.
HOLE
.062 DIA.
.094 DIA.
.046 DIA.
.063 DIA.
.025
V
.045
.093

2301-X-00-XX-00-00-07-0
Swage mount in .067 hole

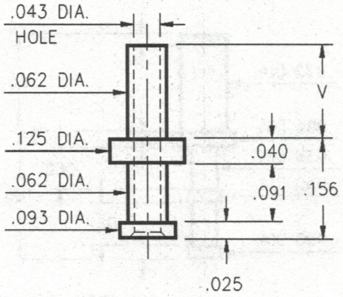
.043 DIA.
HOLE
.062 DIA.
.125 DIA.
.062 DIA.
.093 DIA.
V
.040
.091
.156
.025

2506-X-00-XX-00-00-07-0
Swage in .067 mount hole

- X -	Board Thick-ness	Length V
1	.031	.053
2	.062	.084
3	.094	.115
4	.125	.147

2310

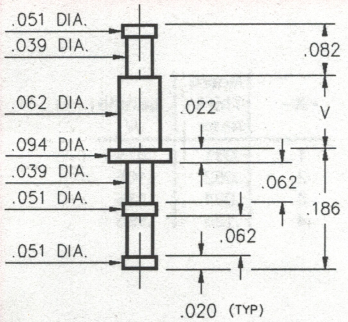
.051 DIA.
.039 DIA.
.062 DIA.
.094 DIA.
.039 DIA.
.051 DIA.
.051 DIA.
.082
.022
V
.062
.186
.062
.020 (TYP)

2310-X-00-XX-00-00-07-0
Swage mount in .067 hole

- X -	Board Thick-ness	Length V
1	.031	.053
2	.062	.082
3	.094	.113
4	.125	.145

2505

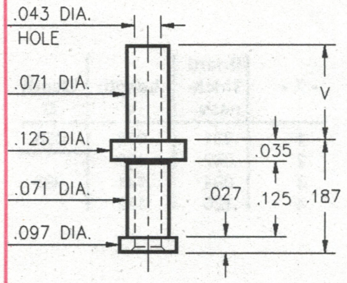
.043 DIA.
HOLE
.071 DIA.
.125 DIA.
.071 DIA.
.097 DIA.
V
.035
.027
.125
.187

2505-X-00-XX-00-00-07-0
Swage mount in .076 hole

- X -	Board Thick-ness	Length V
1	.031	.062
2	.062	.093
3	.094	.125
4	.125	.156

2325/2355/2365

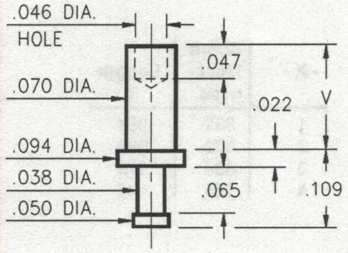
.046 DIA.
HOLE
.070 DIA.
.094 DIA.
.038 DIA.
.050 DIA.
.047
.022
V
.065
.109

2325-X-00-XX-00-00-07-0
Swage mount in .073 hole

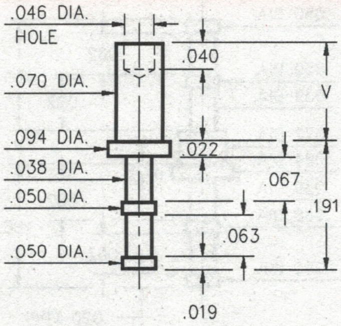
.046 DIA.
HOLE
.070 DIA.
.094 DIA.
.038 DIA.
.050 DIA.
.050 DIA.
.040
V
.022
.067
.191
.063
.019

2355-X-00-XX-00-00-07-0
Swage mount in .073 hole

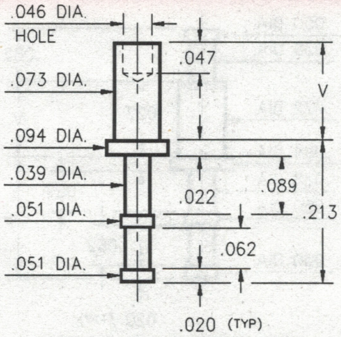
.046 DIA.
HOLE
.073 DIA.
.094 DIA.
.039 DIA.
.051 DIA.
.051 DIA.
.047
V
.022
.089
.213
.062
.020 (TYP)

2365-X-00-XX-00-00-07-0
Swage mount in .076 hole

- X -	Board Thick-ness	Length V
1	.031	.053
2	.062	.084
3	.094	.115
4	.125	.147

SPECIFICATIONS

PIN MATERIAL:
Brass Alloy 360, 1/2 Hard
Swage pins are annealed

DIMENSION IN INCHES
TOLERANCES ON:
LENGTHS: ± .005
DIAMETERS: ± .002
ANGLES: ± 2°

ORDER CODE: 2XXX - X - 00 - XX - 00 - 00 - 07 - 0

BASIC PART #

SPECIFY PIN FINISH

01 200μ” TIN/LEAD OVER NICKEL
44 300μ” SILVER OVER 100μ” COPPER
50 300μ” ELECTRO-SOLDER (60/40) OVER 100μ” COPPER

SOLDER TERMINALS
TURRETS

2304/2305

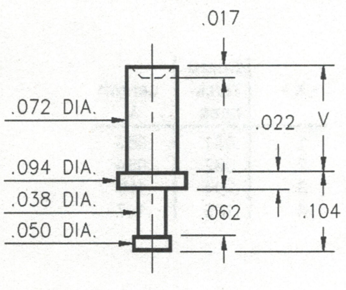
.017
.072 DIA.
.022
V
.094 DIA.
.038 DIA.
.062
.104
.050 DIA.

2304-X-00-XX-00-00-07-0

Swage mount in .076 hole

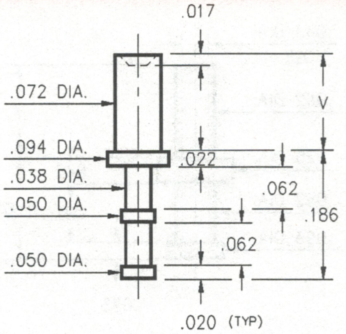
.017
.072 DIA.
V
.094 DIA.
.022
.038 DIA.
.062
.050 DIA.
.186
.062
.050 DIA.
.020 (TYP)

2305-X-00-XX-00-00-07-0

Swage mount in .076 hole

- X -	Board Thick-ness	Length V
1	.031	.051
2	.062	.082
3	.094	.113
4	.125	.145

2503

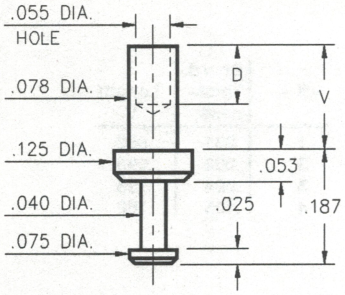
.055 DIA.
HOLE
D
.078 DIA.
V
.125 DIA.
.053
.040 DIA.
.025
.187
.075 DIA.

2503-X-00-XX-00-00-07-0

Swage mount in .082 hole

- X -	Board Thick-ness	Length V	Depth D
1	.031	.078	.068
2	.062	.109	
3	.094	.141	.098
4	.125	.172	

2704

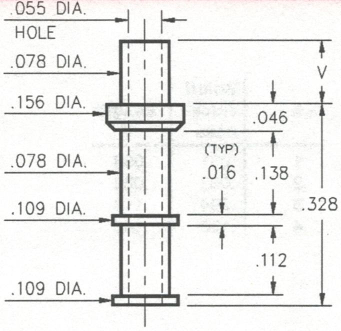
.055 DIA.
HOLE
.078 DIA.
V
.156 DIA.
.046
(TYP)
.078 DIA.
.016
.138
.328
.109 DIA.
.112
.109 DIA.

2704-X-00-XX-00-00-07-0

Swage mount in .082 hole

- X -	Board Thick-ness	Length V
1	.031	.075
2	.062	.105
3	.094	.135
4	.125	.165

2306/2307/2311

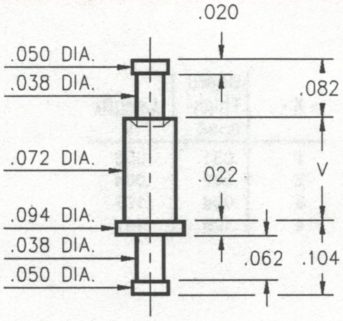
.020
.050 DIA.
.038 DIA.
.082
.072 DIA.
.022
V
.094 DIA.
.038 DIA.
.062
.104
.050 DIA.

2306-X-00-XX-00-00-07-0

Swage mount in .076 hole

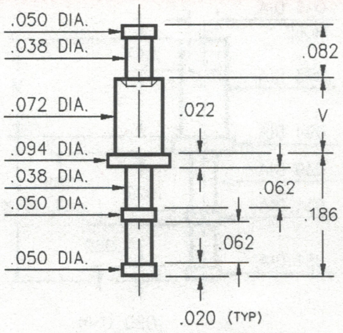
.050 DIA.
.038 DIA.
.082
.072 DIA.
.022
V
.094 DIA.
.038 DIA.
.062
.050 DIA.
.186
.062
.050 DIA.
.020 (TYP)

2307-X-00-XX-00-00-07-0

Swage mount in .076 hole

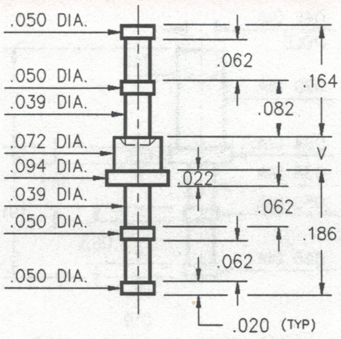
.050 DIA.
.062
.164
.050 DIA.
.039 DIA.
.082
.072 DIA.
V
.094 DIA.
.022
.039 DIA.
.062
.050 DIA.
.186
.062
.050 DIA.
.020 (TYP)

2311-X-00-XX-00-00-07-0

Swage mount in .076 hole

- X -	Board Thick-ness	Length V
1	.031	.051
2	.062	.082
3	.094	.113
4	.125	.145

SPECIFICATIONS

PIN MATERIAL:
Brass Alloy 360, 1/2 Hard
Swage pins are annealed

DIMENSION IN INCHES
TOLERANCES ON:
LENGTHS: ± .005
DIAMETERS: ± .002
ANGLES: ± 2°

ORDER CODE: 2XXX - X - 00 - XX - 00 - 00 - 07 - 0

BASIC PART #

SPECIFY PIN FINISH

- **01** 200µ" TIN/LEAD OVER NICKEL
- **44** 300µ" SILVER OVER 100µ" COPPER
- **50** 300µ" ELECTRO-SOLDER (60/40) OVER 100µ" COPPER

SOLDER TERMINALS
TURRETS

2810

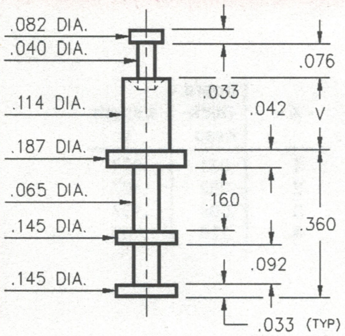

.082 DIA.
.040 DIA.
.076
.033
.114 DIA.
.042
V
.187 DIA.
.065 DIA.
.160
.145 DIA.
.360
.092
.145 DIA.
.033 (TYP)

- X -	Board Thick- ness	Length V
2	.062	.105
3	.094	.135
4	.125	.165

2810-X-00-XX-00-00-07-0

Swage mount in .116 hole

2524

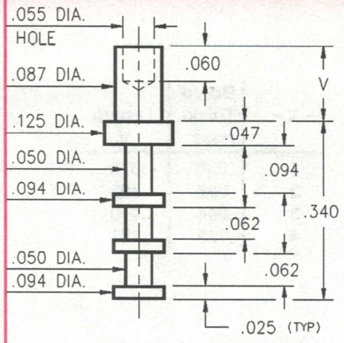

.055 DIA.
HOLE
.060
.087 DIA.
V
.125 DIA.
.047
.050 DIA.
.094 DIA.
.094
.340
.062
.050 DIA.
.094 DIA.
.062
.025 (TYP)

- X -	Board Thick- ness	Length V
1	.031	.075
2	.062	.105
3	.094	.135
4	.125	.165

2524-X-00-XX-00-00-07-0

Swage mount in .092 hole

2561/2508

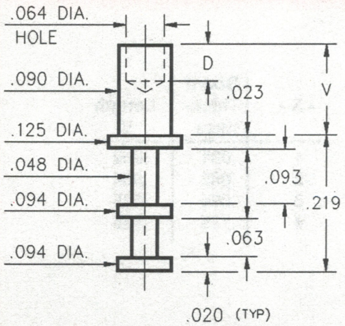

.064 DIA.
HOLE
D
.090 DIA.
.023
V
.125 DIA.
.048 DIA.
.093
.219
.094 DIA.
.063
.094 DIA.
.020 (TYP)

2561-X-00-XX-00-00-07-0

Swage mount in .094 hole

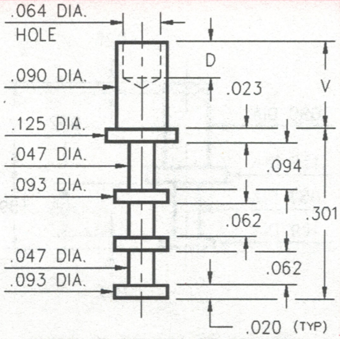

.064 DIA.
HOLE
D
.090 DIA.
.023
V
.125 DIA.
.047 DIA.
.094
.093 DIA.
.062
.301
.047 DIA.
.062
.093 DIA.
.020 (TYP)

2508-X-00-XX-00-00-07-0

Swage mount in .094 hole

- X -	Board Thick- ness	Length V	Depth D
1	.031	.063	.047
2	.062	.094	
3	.094	.125	.062
4	.125	.156	

2551

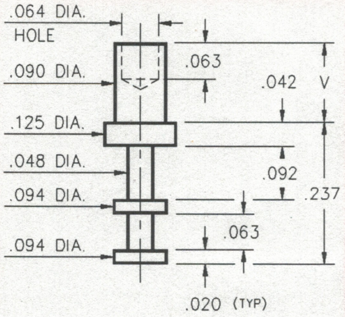

.064 DIA.
HOLE
.063
.090 DIA.
.042
V
.125 DIA.
.048 DIA.
.092
.237
.094 DIA.
.063
.094 DIA.
.020 (TYP)

- X -	Board Thick- ness	Length V
1	.031	.075
2	.062	.105
3	.094	.135
4	.125	.165

2551-X-00-XX-00-00-07-0

Swage mount in .094 hole

2812

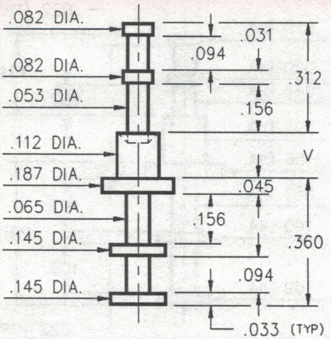

.082 DIA.
.031
.094
.082 DIA.
.312
.053 DIA.
.156
.112 DIA.
V
.187 DIA.
.045
.065 DIA.
.156
.145 DIA.
.360
.094
.145 DIA.
.033 (TYP)

- X -	Board Thick- ness	Length V
1	.062	.105
2	.094	.135
3	.125	.165
4	.188	.230

2812-X-00-XX-00-00-07-0

Swage mount in .116 hole

SPECIFICATIONS

PIN MATERIAL:
Brass Alloy 360, 1/2 Hard
Swage pins are annealed

DIMENSION IN INCHES

TOLERANCES ON:

LENGTHS:	± .005
DIAMETERS:	± .002
ANGLES:	± 2°

ORDER CODE: 2XXX - X - 00 - XX - 00 - 00 - 07 - 0

BASIC PART #

SPECIFY PIN FINISH

01 200μ" TIN/LEAD OVER NICKEL
44 300μ" SILVER OVER 100μ" COPPER
50 300μ" ELECTRO-SOLDER (60/40)
OVER 100μ" COPPER

SOLDER TERMINALS
TURRETS

2501

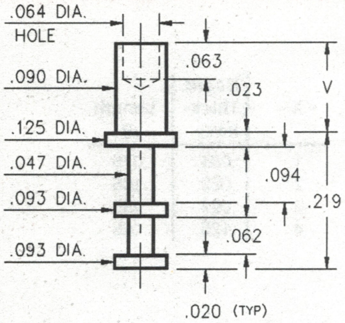
.064 DIA.
HOLE
.090 DIA.
.125 DIA.
.047 DIA.
.093 DIA.
.093 DIA.
.063
.023
V
.094
.219
.062
.020 (TYP)

- X -	Board Thick-ness	Length V
1	.031	.078
2	.062	.109
3	.094	.140
4	.125	.171

2501-X-00-XX-00-00-07-0

Swage mount in .094 hole

2703

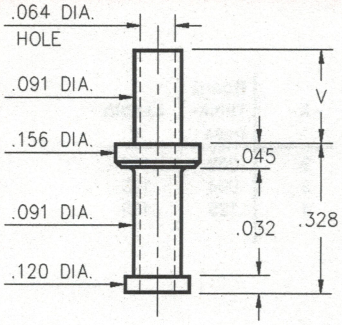
.064 DIA.
HOLE
.091 DIA.
.156 DIA.
.091 DIA.
.120 DIA.
V
.045
.032
.328

- X -	Board Thick-ness	Length V
1	.031	.077
2	.062	.107
3	.094	.137
4	.125	.167

2703-X-00-XX-00-00-07-0

Swage mount in .094 hole

2702

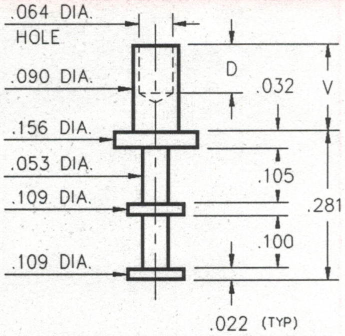
.064 DIA.
HOLE
.090 DIA.
.156 DIA.
.053 DIA.
.109 DIA.
.109 DIA.
D
.032
V
.105
.281
.100
.022 (TYP)

- X -	Board Thick-ness	Length V	Depth D
1	.031	.075	.063
2	.062	.105	
3	.094	.135	.093
4	.125	.165	

2702-X-00-XX-00-00-07-0

Swage mount in .094 hole

2710

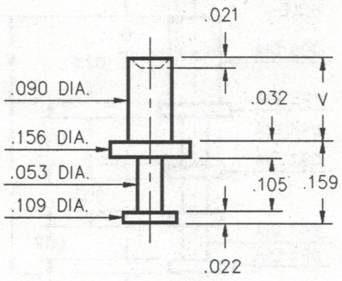
.021
.090 DIA.
.032
V
.156 DIA.
.053 DIA.
.109 DIA.
.105
.159
.022

- X -	Board Thick-ness	Length V
1	.031	.062
2	.062	.094
3	.094	.125
4	.125	.156

2710-X-00-XX-00-00-07-0

Swage mount in .094 hole

2717/2713

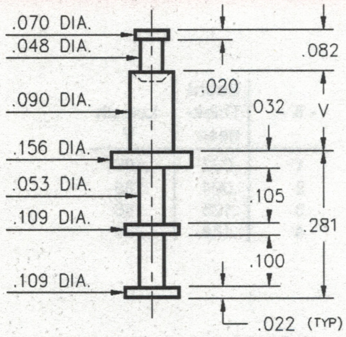
.070 DIA.
.048 DIA.
.082
.090 DIA.
.020
.032
V
.156 DIA.
.053 DIA.
.105
.109 DIA.
.281
.100
.109 DIA.
.022 (TYP)

2717-X-00-XX-00-00-07-0

Swage mount in .094 hole

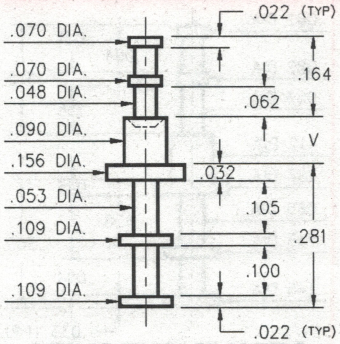
.022 (TYP)
.070 DIA.
.164
.070 DIA.
.048 DIA.
.062
.090 DIA.
V
.156 DIA.
.032
.053 DIA.
.105
.109 DIA.
.281
.100
.109 DIA.
.022 (TYP)

2713-X-00-XX-00-00-07-0

Swage mount in .094 hole

- X -	Board Thick-ness	Length V
1	.031	.062
2	.062	.094
3	.094	.125
4	.125	.156

SPECIFICATIONS

PIN MATERIAL:
Brass Alloy 360, 1/2 Hard
Swage pins are annealed

DIMENSION IN INCHES
TOLERANCES ON:
LENGTHS: ± .005
DIAMETERS: ± .002
ANGLES: ± 2°

ORDER CODE: 2XXX - X - 00 - XX - 00 - 00 - 07 - 0

BASIC PART #

SPECIFY PIN FINISH

01 200µ" TIN/LEAD OVER NICKEL
44 300µ" SILVER OVER 100µ" COPPER
50 300µ" ELECTRO-SOLDER (60/40) OVER 100µ" COPPER

SOLDER TERMINALS
TURRETS

2512/2705

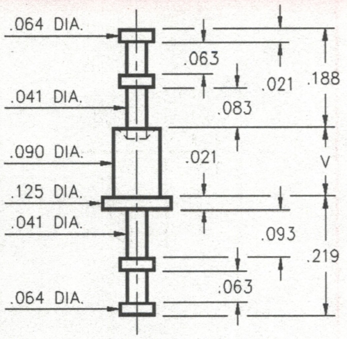

.064 DIA.
.063
.021
.188
.041 DIA.
.083
.090 DIA.
.021
V
.125 DIA.
.041 DIA.
.093
.219
.064 DIA.
.063

2512-X-00-XX-00-00-07-0
Swage mount in .094 hole

- X -	Board Thick-ness	Length V
1	.031	.062
2	.062	.094
3	.094	.125
4	.125	.156

2705

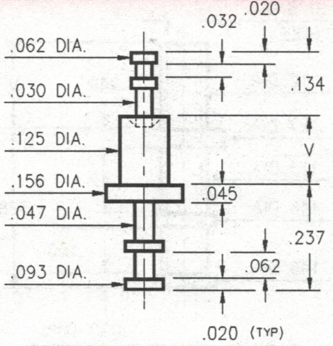

.032
.020
.062 DIA.
.030 DIA.
.134
.125 DIA.
V
.156 DIA.
.045
.047 DIA.
.237
.062
.093 DIA.
.020 (TYP)

2705-X-00-XX-00-00-07-0
Swage mount in .129 hole

- X -	Board Thick-ness	Length V
1	.031	.075
2	.062	.105
3	.094	.135
4	.125	.165

2803

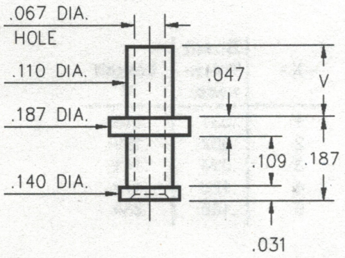

.067 DIA.
HOLE
.110 DIA.
.047
V
.187 DIA.
.109
.187
.140 DIA.
.031

2803-X-00-XX-00-00-07-0
Swage mount in .113 hole

- X -	Board Thick-ness	Length V
1	.031	.078
2	.062	.109
3	.094	.140
4	.125	.171

2815

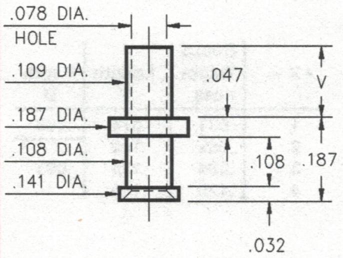

.078 DIA.
HOLE
.109 DIA.
.047
V
.187 DIA.
.108 DIA.
.108
.187
.141 DIA.
.032

2815-X-00-XX-00-00-07-0
Swage mount in .113 hole

- X -	Board Thick-ness	Length V
1	.031	.075
2	.062	.105
3	.094	.135
4	.125	.165

2816

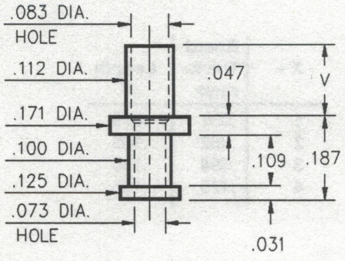

.083 DIA.
HOLE
.112 DIA.
.047
V
.171 DIA.
.100 DIA.
.109
.187
.125 DIA.
.073 DIA.
HOLE
.031

2816-X-00-XX-00-00-07-0
Swage mount in .116 hole

- X -	Board Thick-ness	Length V
1	.031	.078
2	.062	.109
3	.094	.141
4	.125	.172

2817

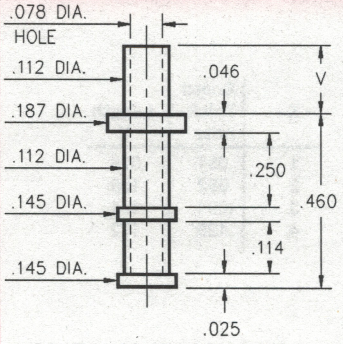

.078 DIA.
HOLE
.112 DIA.
.046
V
.187 DIA.
.250
.112 DIA.
.460
.145 DIA.
.114
.145 DIA.
.025

2817-X-00-XX-00-00-07-0
Swage mount in .116 hole

- X -	Board Thick-ness	Length V
1	.031	.075
2	.062	.105
3	.094	.135
4	.125	.165

SPECIFICATIONS

PIN MATERIAL:
Brass Alloy 360, 1/2 Hard
Swage pins are annealed

DIMENSION IN INCHES
TOLERANCES ON:
LENGTHS: ± .005
DIAMETERS: ± .002
ANGLES: ± 2°

ORDER CODE: 2XXX - X - 00 - XX - 00 - 00 - 07 - 0

BASIC PART #

SPECIFY PIN FINISH

01 200µ" TIN/LEAD OVER NICKEL
44 300µ" SILVER OVER 100µ" COPPER
50 300µ" ELECTRO-SOLDER (60/40) OVER 100µ" COPPER

SOLDER TERMINALS
TURRETS

2802/2804

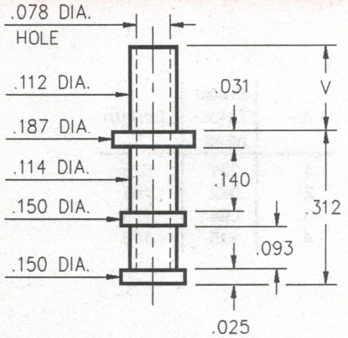

.078 DIA.
HOLE
.112 DIA.
.187 DIA.
.114 DIA.
.150 DIA.
.150 DIA.
.031
V
.140
.312
.093
.025

2802-X-00-XX-00-00-07-0

Swage mount in .118 hole

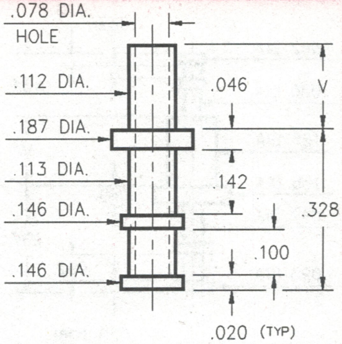

.078 DIA.
HOLE
.112 DIA.
.187 DIA.
.113 DIA.
.146 DIA.
.146 DIA.
.046
V
.142
.328
.100
.020 (TYP)

2804-X-00-XX-00-00-07-0

Swage mount in .118 hole

- X -	Board Thick- ness	Length V
1	.031	.078
2	.062	.109
3	.094	.140
4	.125	.171

2805

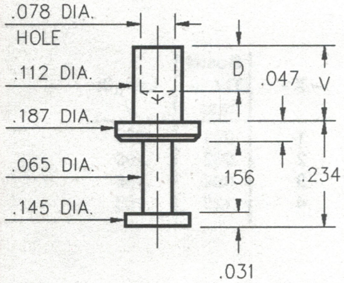

.078 DIA.
HOLE
.112 DIA.
.187 DIA.
.065 DIA.
.145 DIA.
D
.047
V
.156
.234
.031

2805-X-00-XX-00-00-07-0

Swage mount in .116 hole

- X -	Board Thick- ness	Length V	Depth D
1	.031	.074	.068
2	.062	.105	
3	.094	.135	.098
4	.125	.165	

2801

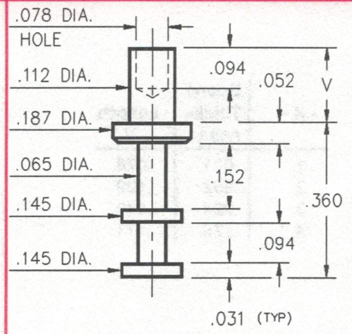

.078 DIA.
HOLE
.112 DIA.
.187 DIA.
.065 DIA.
.145 DIA.
.145 DIA.
.094
.052
V
.152
.360
.094
.031 (TYP)

2801-X-00-XX-00-00-07-0

Swage mount in .116 hole

- X -	Board Thick- ness	Length V
1	.031	.078
2	.062	.109
3	.094	.141
4	.125	.172
5	.188	.234

2806

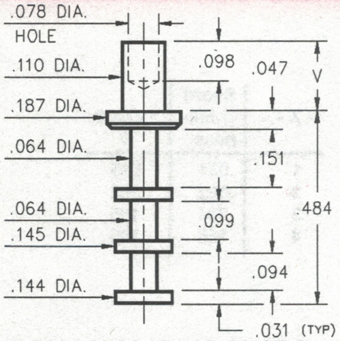

.078 DIA.
HOLE
.110 DIA.
.187 DIA.
.064 DIA.
.064 DIA.
.145 DIA.
.144 DIA.
.098
.047
V
.151
.484
.099
.094
.031 (TYP)

2806-X-00-XX-00-00-07-0

Swage mount in .116 hole

- X -	Board Thick- ness	Length V
1	.031	.078
2	.062	.109
3	.094	.141
4	.125	.172

2811

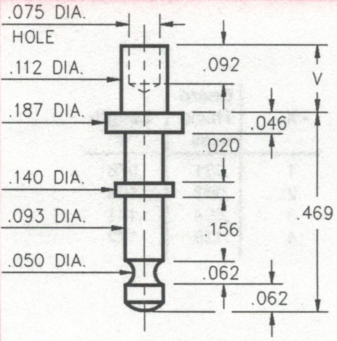

.075 DIA.
HOLE
.112 DIA.
.187 DIA.
.140 DIA.
.093 DIA.
.050 DIA.
.092
V
.046
.020
.469
.156
.062
.062

2811-X-00-XX-00-00-07-0

Swage mount in .116 hole

- X -	Board Thick- ness	Length V
1	.031	.075
2	.062	.105
3	.094	.135
4	.125	.165

SPECIFICATIONS

PIN MATERIAL:
Brass Alloy 360, 1/2 Hard
Swage pins are annealed

DIMENSION IN INCHES
TOLERANCES ON:

LENGTHS:	± .005
DIAMETERS:	± .002
ANGLES:	± 2°

ORDER CODE: 28XX - X - 00 - XX - 00 - 00 - 07 - 0

BASIC PART # (28XX)

SPECIFY PIN FINISH (XX)

01 200μ" TIN/LEAD OVER NICKEL
44 300μ" SILVER OVER 100μ" COPPER
50 300μ" ELECTRO-SOLDER (60/40)
OVER 100μ" COPPER

SOLDER TERMINALS
SLOTTED

2104

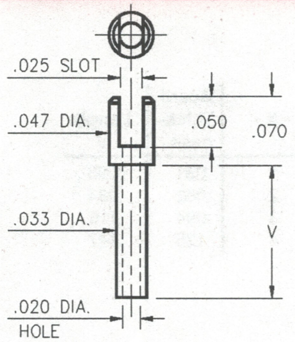

.025 SLOT
.047 DIA.
.050
.070
.033 DIA.
V
.020 DIA.
HOLE

- X -	Board Thick-ness	Length V
1	.031	.055
2	.062	.086
3	.094	.117
4	.125	.148

2104-X-01-XX-00-00-07-0

Swage mount in .036 hole

2112

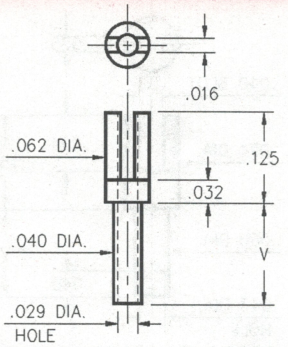

.016
.062 DIA.
.125
.032
.040 DIA.
V
.029 DIA.
HOLE

- X -	Board Thick-ness	Length V
5	.016	.037
1	.031	.053
2	.062	.084
3	.094	.115
4	.125	.147

2112-X-01-XX-00-00-07-0

Swage mount in .043 hole

2105

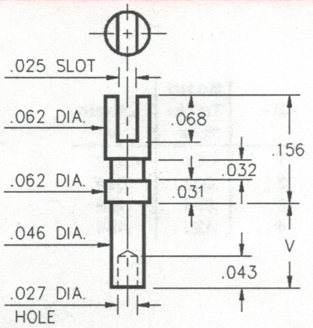

.025 SLOT
.062 DIA.
.068
.156
.032
.062 DIA.
.031
.046 DIA.
V
.043
.027 DIA.
HOLE

- X -	Board Thick-ness	Length V
1	.031	.055
2	.062	.086
3	.094	.117
4	.125	.149

2105-X-00-XX-00-00-07-0

Swage mount in .052 hole

2103

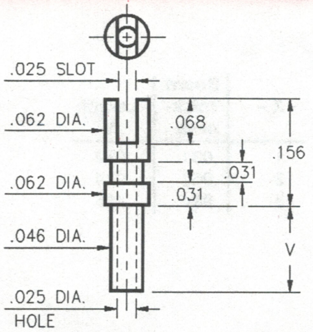

.025 SLOT
.062 DIA.
.068
.156
.031
.062 DIA.
.031
.046 DIA.
V
.025 DIA.
HOLE

- X -	Board Thick-ness	Length V
1	.031	.058
2	.062	.089
3	.094	.120
4	.125	.150

2103-X-01-XX-00-00-07-0

Swage mount in .052 hole

2106/2107

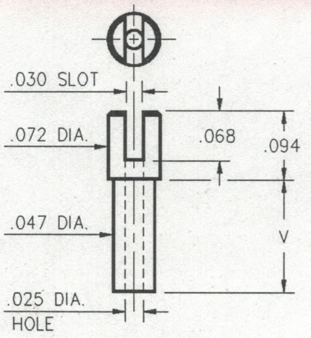

.030 SLOT
.072 DIA.
.068
.094
.047 DIA.
V
.025 DIA.
HOLE

2106-X-01-XX-00-00-07-0

Swage mount in .052 hole

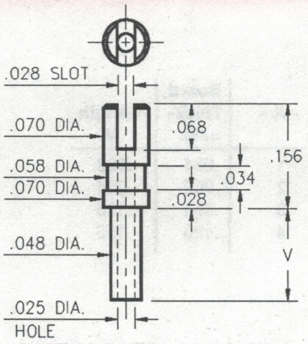

.028 SLOT
.070 DIA.
.068
.156
.058 DIA.
.034
.070 DIA.
.028
.048 DIA.
V
.025 DIA.
HOLE

2107-X-01-XX-00-00-07-0

Swage mount in .052 hole

- X -	Board Thick-ness	Length V
1	.031	.051
2	.062	.082
3	.094	.113
4	.125	.145

SPECIFICATIONS

PIN MATERIAL:
Brass Alloy 360, 1/2 Hard
Swage pins are annealed

DIMENSION IN INCHES
TOLERANCES ON:

LENGTHS:	± .005
DIAMETERS:	± .002
ANGLES:	± 2°

ORDER CODE: 21XX - X - 01 - XX - 00 - 00 - 07 - 0

BASIC PART #

SPECIFY PIN FINISH

01 200μ" TIN/LEAD OVER NICKEL
44 300μ" SILVER OVER 100μ" COPPER
50 300μ" ELECTRO-SOLDER (60/40)
OVER 100μ" COPPER

SOLDER TERMINALS
SLOTTED

2303/2323/2322

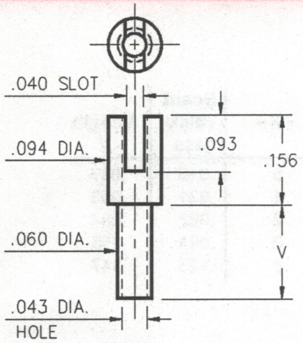

.040 SLOT
.094 DIA.
.093
.156
.060 DIA.
V
.043 DIA.
HOLE

2303-X-01-XX-00-00-07-0
Swage mount in .064 hole

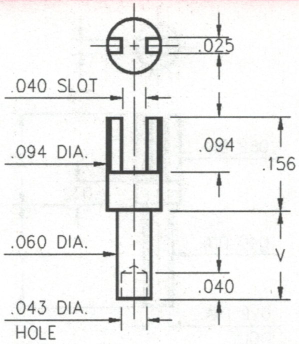

.025
.040 SLOT
.094 DIA.
.094
.156
.060 DIA.
V
.040
.043 DIA.
HOLE

2323-X-01-XX-00-00-07-0
Swage mount in .064 hole

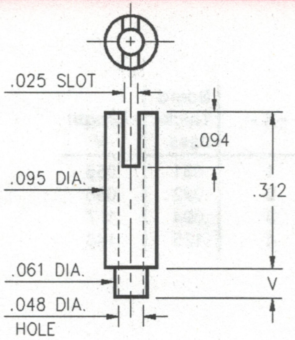

.025 SLOT
.094
.095 DIA.
.312
.061 DIA.
V
.048 DIA.
HOLE

2322-X-01-XX-00-00-07-0
Swage mount in .064 hole

- X -	Board Thickness	Length V
1	.031	.053
2	.062	.084
3	.094	.115
4	.125	.147

2320

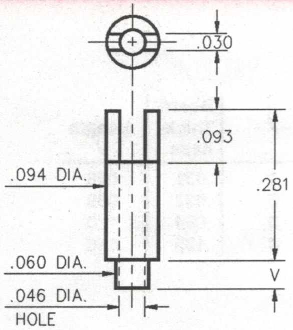

.030
.093
.094 DIA.
.281
.060 DIA.
V
.046 DIA.
HOLE

2320-X-01-XX-00-00-07-0
Swage mount in .064 hole

- X -	Board Thickness	Length V
1	.031	.053
2	.062	.084
3	.094	.115

2328

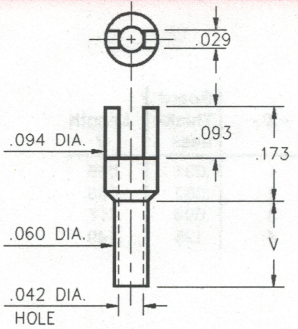

.029
.093
.094 DIA.
.173
.060 DIA.
V
.042 DIA.
HOLE

2328-X-01-XX-00-00-07-0
Swage mount in .064 hole

- X -	Board Thickness	Length V
1	.031	.062
2	.062	.094
3	.094	.125
4	.125	.156

2520/2517

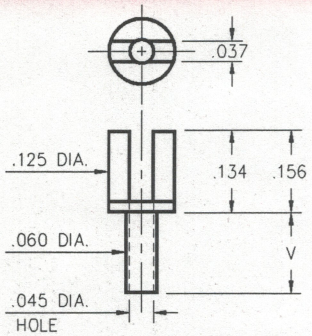

.037
.125 DIA.
.134
.156
.060 DIA.
V
.045 DIA.
HOLE

2520-X-01-XX-00-00-07-0
Swage mount in .064 hole

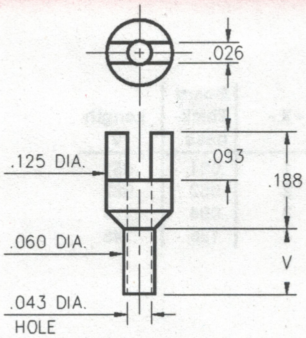

.026
.125 DIA.
.093
.188
.060 DIA.
V
.043 DIA.
HOLE

2517-X-01-XX-00-00-07-0
Swage mount in .064 hole

- X -	Board Thickness	Length V
1	.031	.062
2	.062	.094
3	.094	.125
4	.125	.156

SPECIFICATIONS

PIN MATERIAL:
Brass Alloy 360, 1/2 Hard
Swage pins are annealed

DIMENSION IN INCHES
TOLERANCES ON:
LENGTHS: ± .005
DIAMETERS: ± .002
ANGLES: ± 2°

ORDER CODE: 2XXX - X - 01 - XX - 00 - 00 - 07 - 0

BASIC PART #

SPECIFY PIN FINISH

01 200µ" TIN/LEAD OVER NICKEL
44 300µ" SILVER OVER 100µ" COPPER
50 300µ" ELECTRO-SOLDER (60/40)
OVER 100µ" COPPER

SOLDER TERMINALS
SLOTTED

2315

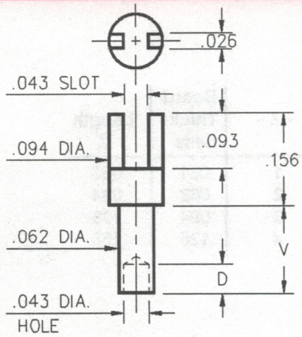
.026
.043 SLOT
.094 DIA.
.093
.156
.062 DIA.
V
D
.043 DIA.
HOLE

2315-X-01-XX-00-00-07-0

Swage mount in .067 hole

- X -	Board Thick-ness	Length V	Depth D
1	.031	.045	.040
2	.062	.094	
3	.094	.125	.062
4	.125	.156	

2302

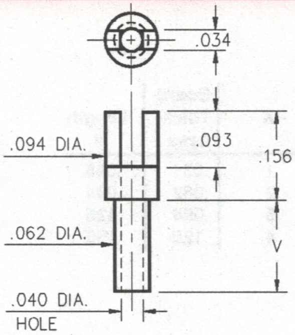
.034
.094 DIA.
.093
.156
.062 DIA.
V
.040 DIA.
HOLE

2302-X-01-XX-00-00-07-0

Swage mount in .067 hole

- X -	Board Thick-ness	Length V
1	.031	.053
2	.062	.084
3	.094	.115
4	.125	.147

2352

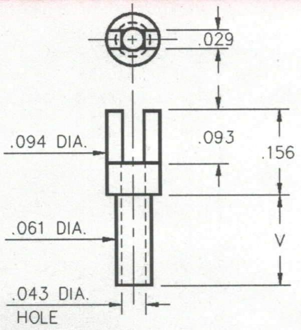
.029
.094 DIA.
.093
.156
.061 DIA.
V
.043 DIA.
HOLE

2352-X-01-XX-00-00-07-0

Swage mount in .067 hole

- X -	Board Thick-ness	Length V
1	.031	.045
2	.062	.094
3	.094	.125
4	.125	.156

2362

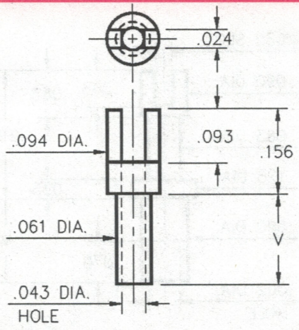
.024
.094 DIA.
.093
.156
.061 DIA.
V
.043 DIA.
HOLE

2362-X-01-XX-00-00-07-0

Swage mount in .067 hole

- X -	Board Thick-ness	Length V
5	.016	.037
1	.031	.053
2	.062	.084
3	.094	.115
4	.125	.147

2507/2526

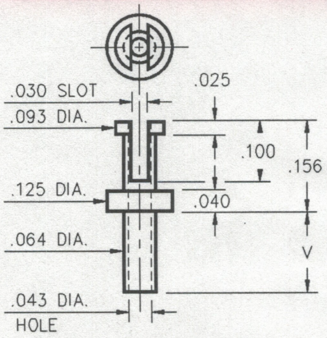
.030 SLOT
.025
.093 DIA.
.100
.156
.125 DIA.
.040
.064 DIA.
V
.043 DIA.
HOLE

2507-X-01-XX-00-00-07-0

Swage mount in .067 hole

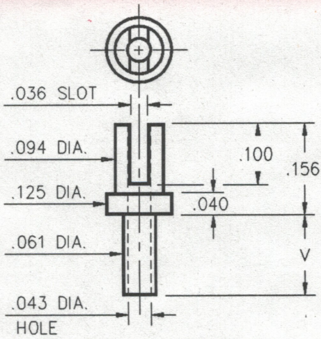
.036 SLOT
.094 DIA.
.100
.156
.125 DIA.
.040
.061 DIA.
V
.043 DIA.
HOLE

2526-X-01-XX-00-00-07-0

Swage mount in .064 hole

- X -	Board Thick-ness	Length V
1	.031	.053
2	.062	.084
3	.094	.115
4	.125	.147

SPECIFICATIONS

PIN MATERIAL:
Brass Alloy 360, 1/2 Hard
Swage pins are annealed

DIMENSION IN INCHES
TOLERANCES ON:
LENGTHS: ± .005
DIAMETERS: ± .002
ANGLES: ± 2°

ORDER CODE: 2XXX - X - 01 - XX - 00 - 00 - 07 - 0

BASIC PART #

SPECIFY PIN FINISH

01 200μ" TIN/LEAD OVER NICKEL
44 300μ" SILVER OVER 100μ" COPPER
50 300μ" ELECTRO-SOLDER (60/40) OVER 100μ" COPPER

SOLDER TERMINALS
SLOTTED

2314

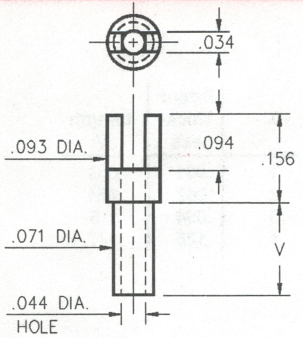
.034
.093 DIA.
.094
.156
.071 DIA.
V
.044 DIA.
HOLE

2314-X-01-XX-00-00-07-0

Swage mount in .076 hole

- X -	Board Thick-ness	Length V
1	.031	.045
2	.062	.094
3	.094	.125
4	.125	.156

2511

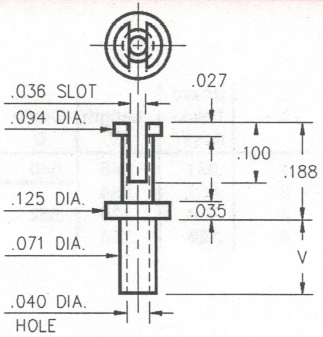
.036 SLOT
.027
.094 DIA.
.100
.188
.125 DIA.
.035
.071 DIA.
V
.040 DIA.
HOLE

2511-X-01-XX-00-00-07-0

Swage mount in .076 hole

- X -	Board Thick-ness	Length V
1	.031	.063
2	.062	.094
3	.094	.125
4	.125	.156

2515/2516

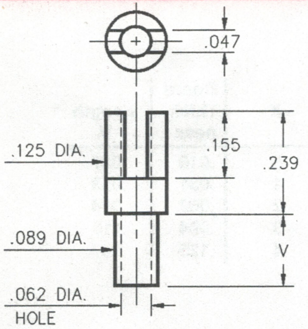
.047
.125 DIA.
.155
.239
.089 DIA.
V
.062 DIA.
HOLE

2515-X-01-XX-00-00-07-0

Swage mount in .094 hole

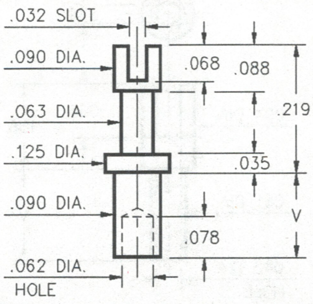
.032 SLOT
.090 DIA.
.068
.088
.219
.063 DIA.
.125 DIA.
.035
.090 DIA.
V
.078
.062 DIA.
HOLE

2516-X-01-XX-00-00-07-0

Swage mount in .094 hole

- X -	Board Thick-ness	Length V
1	.031	.075
2	.062	.105
3	.094	.135
4	.125	.147

2502

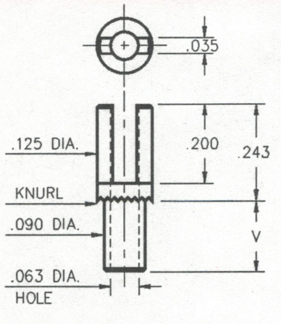
.035
.125 DIA.
.200
.243
KNURL
.090 DIA.
V
.063 DIA.
HOLE

2502-X-01-XX-00-00-07-0

Swage mount in .094 hole

- X -	Board Thick-ness	Length V
1	.031	.080
2	.062	.111
3	.094	.143
4	.125	.174

SPECIFICATIONS

PIN MATERIAL:
Brass Alloy 360, 1/2 Hard
Swage pins are annealed

DIMENSION IN INCHES

TOLERANCES ON:

LENGTHS:	± .005
DIAMETERS:	± .002
ANGLES:	± 2°

ORDER CODE: 2XXX - X - 01 - XX - 00 - 00 - 07 - 0

BASIC PART # → 2XXX

SPECIFY PIN FINISH → XX

01 200µ" TIN/LEAD OVER NICKEL
44 300µ" SILVER OVER 100µ" COPPER
50 300µ" ELECTRO-SOLDER (60/40) OVER 100µ" COPPER

SOLDER TERMINALS
SLOTTED

2715

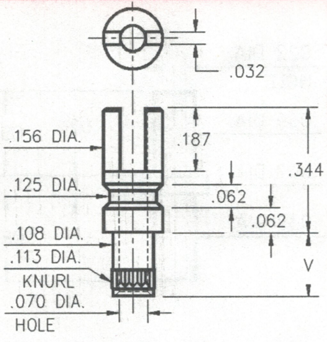

.032
.156 DIA.
.187
.344
.125 DIA.
.062
.062
.108 DIA.
.113 DIA.
KNURL
V
.070 DIA.
HOLE

2715-X-01-XX-00-00-07-0
Swage mount in .116 hole

- X -	Board Thick-ness	Length V
2	.062	.109
3	.094	.141
4	.125	.172

2762

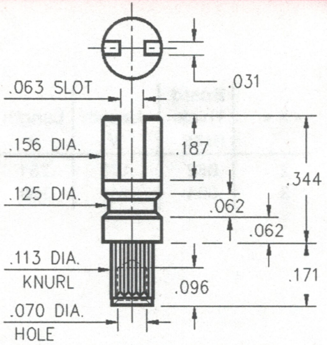

.031
.063 SLOT
.156 DIA.
.187
.344
.125 DIA.
.062
.062
.113 DIA.
KNURL
.096
.171
.070 DIA.
HOLE

2762-4-01-XX-00-00-07-0
Swage mount in .116 hole
For .125 thick board

2701/2808

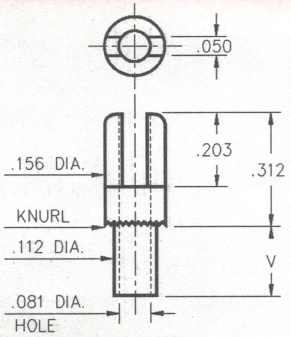

.050
.203
.156 DIA.
.312
KNURL
.112 DIA.
V
.081 DIA.
HOLE

2701-X-01-XX-00-00-07-0
Swage mount in .116 hole

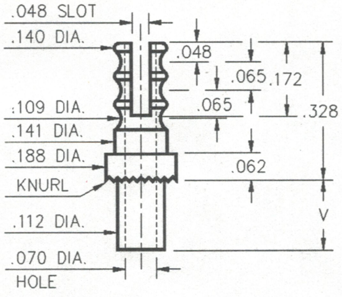

.048 SLOT
.140 DIA.
.048
.065
.172
.109 DIA.
.065
.328
.141 DIA.
.188 DIA.
.062
KNURL
V
.112 DIA.
.070 DIA.
HOLE

2808-X-01-XX-00-00-07-0
Swage mount in .116 hole

- X -	Board Thick-ness	Length V
1	.031	.075
2	.062	.105
3	.094	.135
4	.125	.165

2807

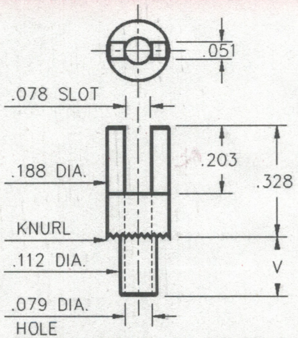

.051
.078 SLOT
.203
.188 DIA.
.328
KNURL
.112 DIA.
V
.079 DIA.
HOLE

2807-X-01-XX-00-00-07-0
Swage mount in .116 hole

- X -	Board Thick-ness	Length V
1	.031	.078
2	.062	.109
3	.094	.140
4	.125	.171

2809

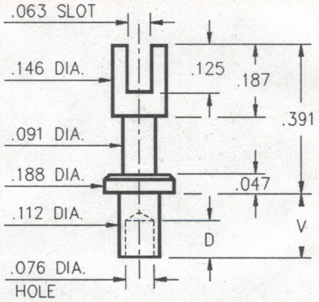

.063 SLOT
.146 DIA.
.125
.187
.391
.091 DIA.
.188 DIA.
.047
.112 DIA.
D
V
.076 DIA.
HOLE

2809-X-01-XX-00-00-07-0
Swage mount in .116 hole

- X -	Board Thick-ness	Length V	Depth D
1	.031	.078	.068
2	.062	.109	
3	.094	.141	.098
4	.125	.172	

SPECIFICATIONS

PIN MATERIAL:
Brass Alloy 360, 1/2 Hard
Swage pins are annealed

DIMENSION IN INCHES
TOLERANCES ON:
LENGTHS: ± .005
DIAMETERS: ± .002
ANGLES: ± 2°

ORDER CODE: 2XXX - X - 01 - XX - 00 - 00 - 07 - 0

BASIC PART #

SPECIFY PIN FINISH

01 200µ" TIN/LEAD OVER NICKEL
44 300µ" SILVER OVER 100µ" COPPER
50 300µ" ELECTRO-SOLDER (60/40)
OVER 100µ" COPPER

SOLDER TERMINALS
VARIOUS TYPES

2709

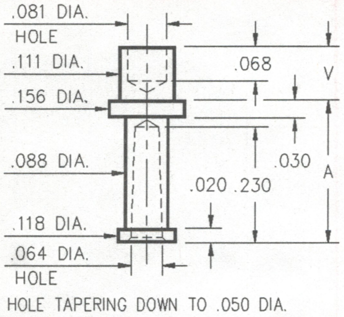
.081 DIA.
HOLE
.111 DIA.
.156 DIA.
.088 DIA.
.118 DIA.
.064 DIA.
HOLE
HOLE TAPERING DOWN TO .050 DIA.
.068
V
.030
A
.020
.230

- X -	Board Thick-ness	Length V	Length A
2	.062	.109	.281
3	.094	.141	.250

2709-X-07-XX-00-00-07-0
Swage mount in .116 hole

8602

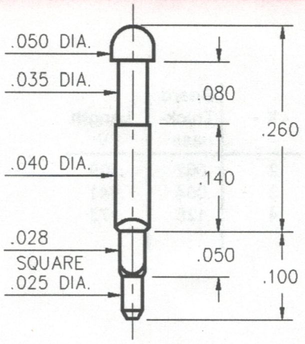
.050 DIA.
.035 DIA.
.040 DIA.
.028
SQUARE
.025 DIA.
.080
.260
.140
.050
.100

8602-1-00-XX-00-00-07-0
Square press-fit in .032
plated thru hole

2115

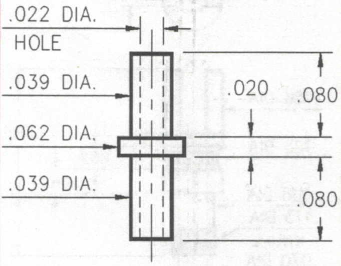
.022 DIA.
HOLE
.039 DIA.
.062 DIA.
.039 DIA.
.020
.080
.080

2115-2-00-XX-00-00-07-0
Swage mount in .043 hole
For .062 thick board

2326

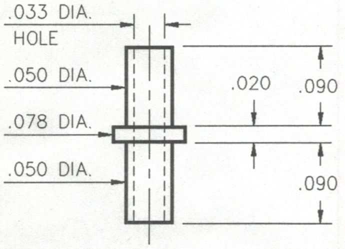
.033 DIA.
HOLE
.050 DIA.
.078 DIA.
.050 DIA.
.020
.090
.090

2326-2-00-XX-00-00-07-0
Swage mount in .055 hole
For .062 thick board

SPECIFICATIONS

PIN MATERIAL:
Brass Alloy 360, 1/2 Hard
Swage pins are annealed

DIMENSION IN INCHES
TOLERANCES ON:
LENGTHS: ± .005
DIAMETERS: ± .002
ANGLES: ± 2°

ORDER CODE: XXXX - X - 0X - XX - 00 - 00 - 07 - 0

BASIC PART #

SPECIFY PIN FINISH

- **01** 200µ" TIN/LEAD OVER NICKEL
- **44** 300µ" SILVER OVER 100µ" COPPER
- **50** 300µ" ELECTRO-SOLDER (60/40) OVER 100µ" COPPER

SOLDER TERMINALS PIN TYPE

2318

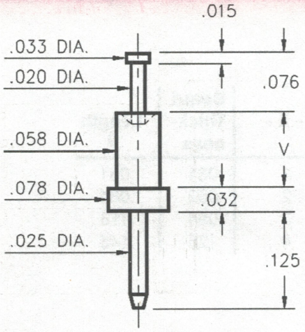
.015
.033 DIA.
.020 DIA.
.076
.058 DIA.
V
.078 DIA.
.032
.025 DIA.
.125

- X -	Board Thick- ness	Length V
1	.031	.051
2	.026	.082
3	.094	.113

2318-X-00-XX-00-00-07-0
Swage mount in .062 hole

2309

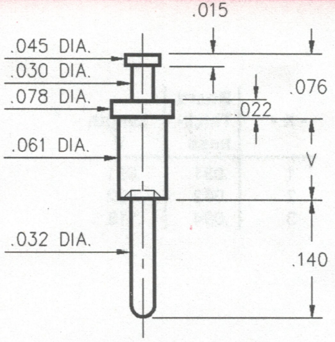
.015
.045 DIA.
.030 DIA.
.078 DIA.
.076
.022
.061 DIA.
V
.032 DIA.
.140

- X -	Board Thick- ness	Length V
1	.031	.054
2	.062	.084
3	.094	.115
4	.125	.147

2309-X-00-XX-00-00-07-0
Swage mount in .064 hole

2514

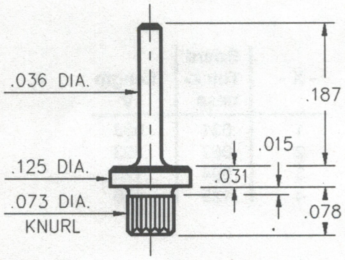
.036 DIA.
.187
.015
.125 DIA.
.031
.073 DIA.
KNURL
.078

2514-2-00-XX-00-00-07-0
Press-fit in .070 mounting hole

SPECIFICATIONS

PIN MATERIAL:
Brass Alloy 360, 1/2 Hard
Swage pins are annealed

DIMENSION IN INCHES
TOLERANCES ON:
LENGTHS: ± .005
DIAMETERS: ± .002
ANGLES: ± 2°

ORDER CODE: XXXX - X - 0X - XX - 00 - 00 - 07 - 0

BASIC PART #

SPECIFY PIN FINISH

01 200µ" TIN/LEAD OVER NICKEL
44 300µ" SILVER OVER 100µ" COPPER
50 300µ" ELECTRO-SOLDER (60/40) OVER 100µ" COPPER

SOLDER TERMINALS
PIN TYPE

2319

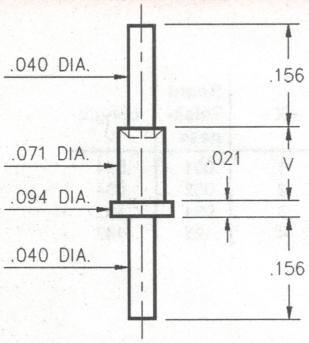
.040 DIA.
.156
.071 DIA.
.021
V
.094 DIA.
.040 DIA.
.156

- X -	Board Thick- ness	Length V
1	.031	.051
2	.062	.082
3	.094	.113

2319-X-00-XX-00-00-07-0

Swage mount in .076 hole

2313

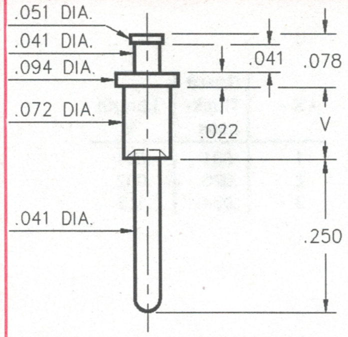
.051 DIA.
.041 DIA.
.094 DIA.
.041
.078
.072 DIA.
.022
V
.041 DIA.
.250

- X -	Board Thick- ness	Length V
1	.031	.051
2	.062	.084
3	.094	.113
4	.125	.145

2313-X-00-XX-00-00-07-0

Swage mount in .076 hole

2321

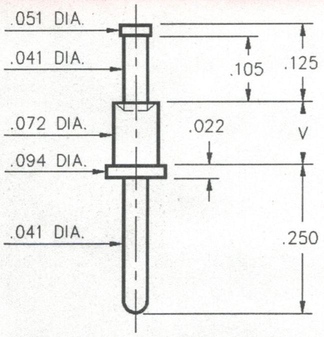
.051 DIA.
.041 DIA.
.105
.125
.072 DIA.
.022
V
.094 DIA.
.041 DIA.
.250

- X -	Board Thick- ness	Length V
1	.031	.051
2	.062	.082
3	.094	.113
4	.125	.145

2321-X-00-XX-00-00-07-0

Swage mount in .076 hole

2706

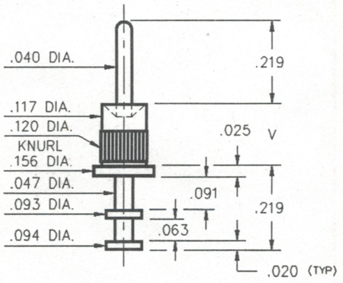
.040 DIA.
.219
.117 DIA.
.120 DIA.
KNURL
.156 DIA.
.025
V
.047 DIA.
.093 DIA.
.091
.219
.094 DIA.
.063
.020 (TYP)

- X -	Board Thick- ness	Length V
1	.031	.063
2	.062	.093
3	.094	.125
4	.125	.156

2706-X-00-XX-00-00-07-0

Swage mount in .120 hole

2530

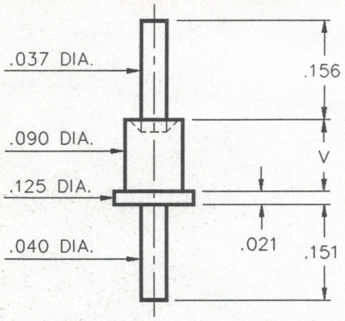
.037 DIA.
.156
.090 DIA.
V
.125 DIA.
.040 DIA.
.021
.151

- X -	Board Thick- ness	Length V
2	.062	.094
3	.094	.125
4	.125	.156

2530-X-00-XX-00-00-07-0

Swage mount in .094 hole

SPECIFICATIONS

PIN MATERIAL:
Brass Alloy 360, 1/2 Hard
Swage pins are annealed

DIMENSION IN INCHES
TOLERANCES ON:
LENGTHS: ± .005
DIAMETERS: ± .002
ANGLES: ± 2°

ORDER CODE: 2XXX - X - 0X - XX - 00 - 00 - 07 - 0

BASIC PART #

SPECIFY PIN FINISH

01 200µ" TIN/LEAD OVER NICKEL
44 300µ" SILVER OVER 100µ" COPPER
50 300µ" ELECTRO-SOLDER (60/40) OVER 100µ" COPPER

THE "MULTI-FINGER" CONTACT

Mill-Max makes pin receptacles by press-fitting a "multi-finger" spring contact into a machined shell. A selection of 29 contact types are pre-tooled for those who wish to design custom receptacles. This extensive family of contacts will accept round pins ranging from .012" to .102" diameter, as well as rectangular component leads and square wraposts, where the effective diameter is taken as the diagonal dimension of the lead.

Many contacts are interchangeable within a given shell, and so the contact selector chart has been organized by alternate contact groupings. Standard receptacles found in this catalog can be easily assembled with alternate contacts to suit special applications, for example: low insertion force or high operating temperature.

CONTACT SELECTOR CHART

GROUPING FOR INTERCHANGEABILITY	CONTACT TYPE	MINIMUM PIN DIAMETER	MAXIMUM PIN DIAMETER	COMPLIANCY (δ)	MINIMUM PIN LENGTH	NUMBER OF FINGERS	SPRING MATERIAL	CURRENT RATING (FOR 10° ΔT)	DATA PAGE	STANDARD PRODUCTS PAGE
	#10	.012	.017	.003	.060	6	BeCu	2A	155	82
A	#09	.015	.018	.002	.051	3		3A		83-86
	#11		.021	.003	.075					
	#21		.022	.004					156	
	#05			.004						
B	#12			.003	.062	4				87
	#22			.005		6			157	
C	#30		.025		.083	4				88-96 115,116
	#38			.004			BeNi			
	#20		.026	.009			BeCu		158	
	#32					6				
	#35			.008						
	#43								159	
	#15	.022	.032	.004				4.5A		97
D	#06	.022		.007	.113	4				98-101 117
	#26			.005			BeNi		160	
	#16		.034	.006	.083	6	BeCu			
	#47	.025	.037	.011						102,103
	#18	.037	.043	.004	.062			8A	161	104
E	#34	.032	.047	.010	.120	4				105-107
	#24			.009			BeNi			
F	#02	.040	.050	.006	.084	6	BeCu		162	108
	#28	.042	.052	.005						
	#03	.040	.060	.010	.150	4		11.2A		109
G	#23	.045	.067	.008	.100	6			163	110,111
	#13	.048	.064	.010	.124	4				
	#07	.065	.082	.013	.150			15A		112,113
	#14	.065	.085	.014	.150				164	N/A
	#08	.084	.102	.011	.122	6		18A		114

CONTACT MATERIAL AND STRESS RELAXATION AT HIGH TEMPERATURE

Mill-Max contacts are made from either beryllium copper or beryllium nickel that has been heat treated to acheive ultimate spring properties. The graph illustrates how beryllium copper loses its spring properties over time at a high temperature (225°C). Thus for burn-in applications and continuous operation above 150°C, beryllium nickel should be substituted for beryllium copper.

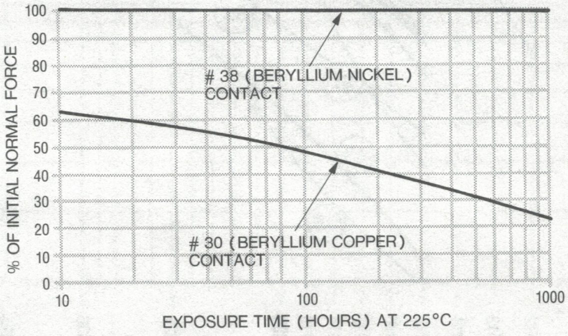

CONTACT SPECIFICATIONS

COMPLIANCY (δ)

The Mill-Max "multi-finger" contact exhibits wide compliance, ie: the ability of any single contact to accept a broad range of round pins as well as rectangular or square component leads. This ability is referred to as the contact's "compliancy". The compliancy factor (δ) specifies the re-configured operating range after the initial insertion of the largest permissible mating pin. For example: the # 34 contact has an initial operating range from .032" to .047" diameter pins, and a compliancy of .010"; but after insertion of a .047" pin, the contact is sized, and the minimum pin acceptance becomes .047" - .010" = .037". Thus, the new operating range becomes .037" to .047".

The insertion/extraction/normal force characteristics that follow were derived using 30μ" gold plated contact and polished steel, gauge pins having a bullet-shaped tip. The curves represent typical average values. **For your specific application, use the action card in the back of this catalog to obtain complimentary samples for your evaluation.**

NORMAL FORCE

Normal force is the force with which each finger of the "multi-finger" contact grips the mating pin or component lead. For normal forces below 30 grams, gold on both the pin and contact is recommended. For normal forces above 100 grams, tin finish has proven to be very reliable.

CURRENT RATING

Current rating for each contact group can be found in the contact selector chart on page 153. This current rating (for a 10° C temperature rise above ambient) is conservative since it rates an individual pin/ receptacle pair in the free air. For all practical applications, the current rating will be higher because of the heat sinking ability of wires and circuit traces attached to the pin and receptacles.

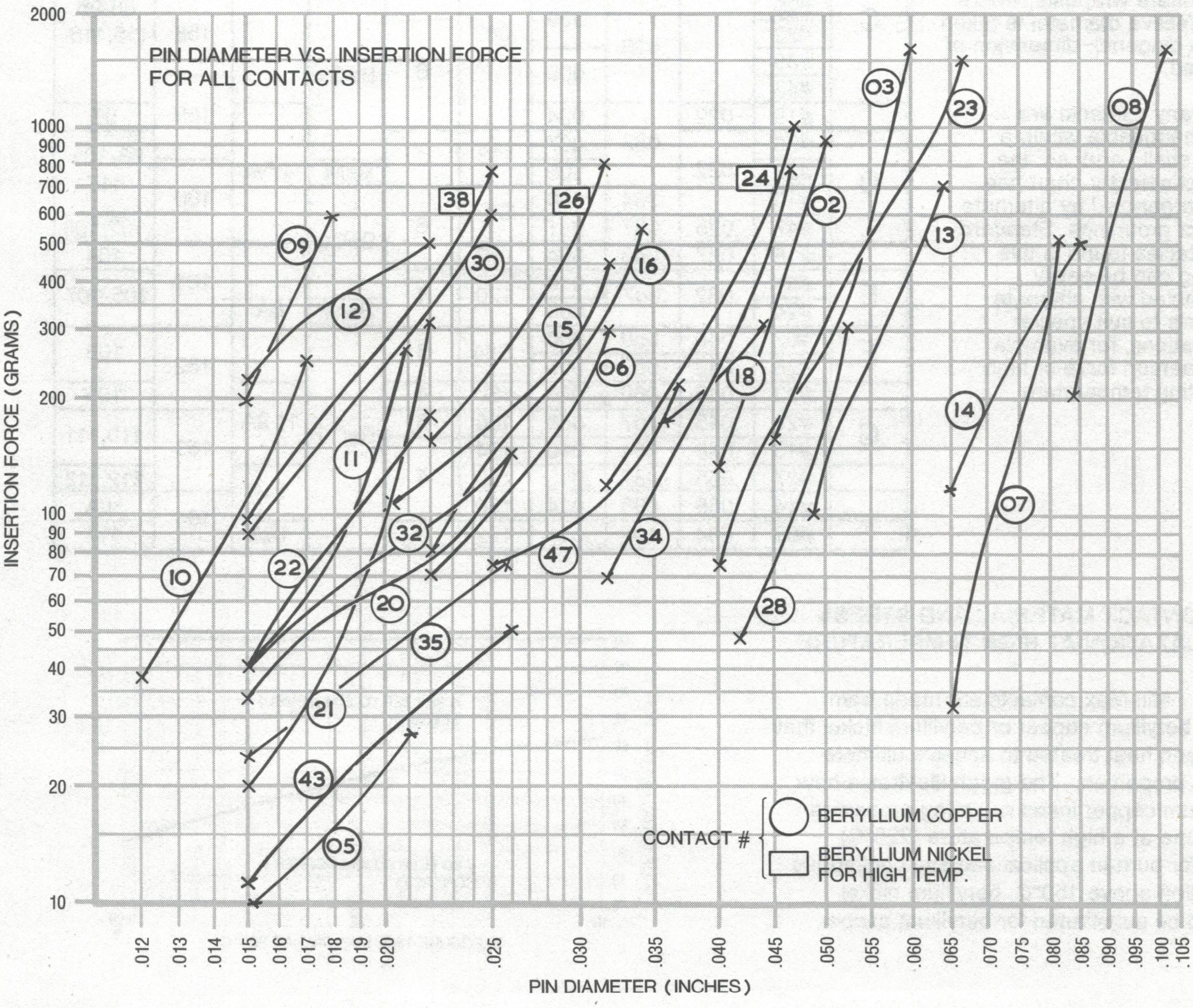

CONTACT DATA

Insertion/ Extraction/ Normal Force Graphs

#10 CONTACT

FOR .012 - .017 DIAMETER PINS (δ = .003)
6 - FINGER

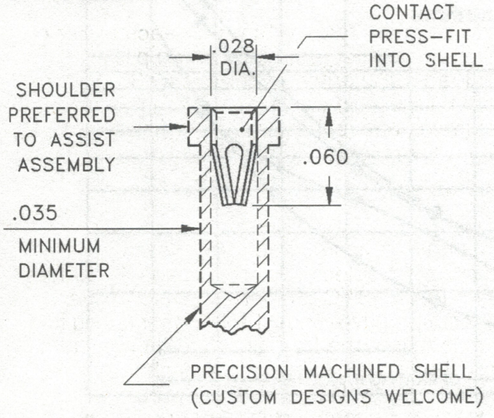

CONTACT
PRESS–FIT
INTO SHELL
.028
DIA.
SHOULDER
PREFERRED
TO ASSIST
ASSEMBLY
.060
.035
MINIMUM
DIAMETER
PRECISION MACHINED SHELL
(CUSTOM DESIGNS WELCOME)

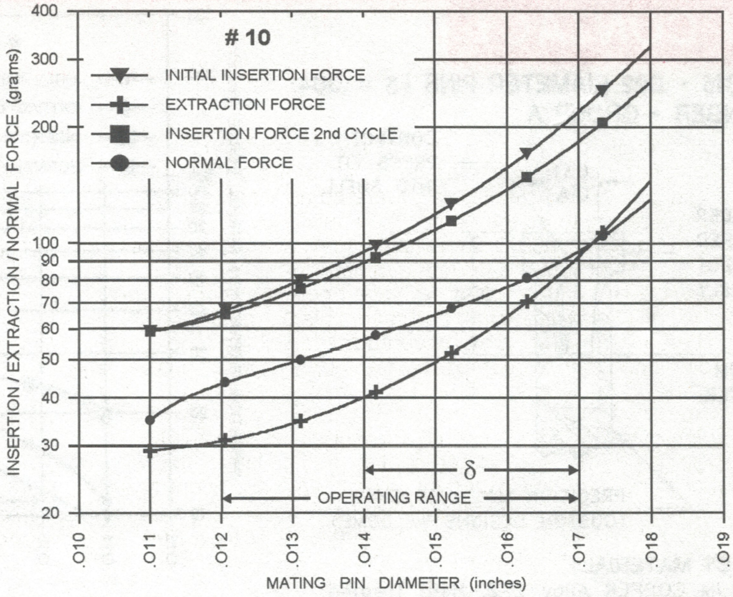

CONTACT MATERIAL:
BERYLLIUM COPPER Alloy 172, Heat Treated

#09 CONTACT

FOR .015 - .018 DIAMETER PINS (δ = .002)
3 - FINGER • GROUP A

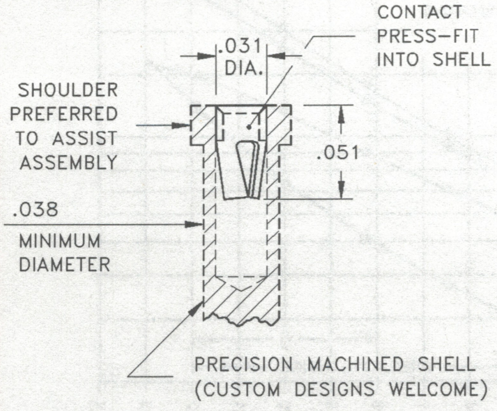

CONTACT
PRESS–FIT
INTO SHELL
.031
DIA.
SHOULDER
PREFERRED
TO ASSIST
ASSEMBLY
.051
.038
MINIMUM
DIAMETER
PRECISION MACHINED SHELL
(CUSTOM DESIGNS WELCOME)

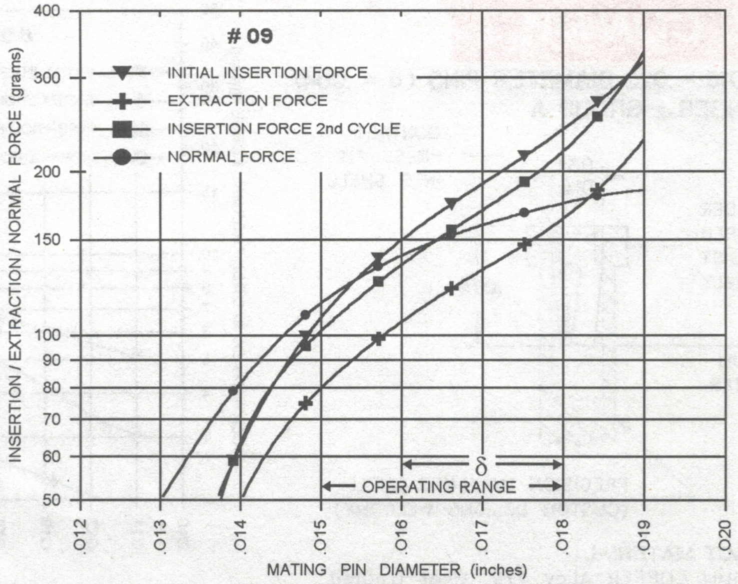

CONTACT MATERIAL:
BERYLLIUM COPPER Alloy 172, Heat Treated

#11 CONTACT

FOR .015 - .021 DIAMETER PINS (δ = .003)
3 - FINGER • GROUP A

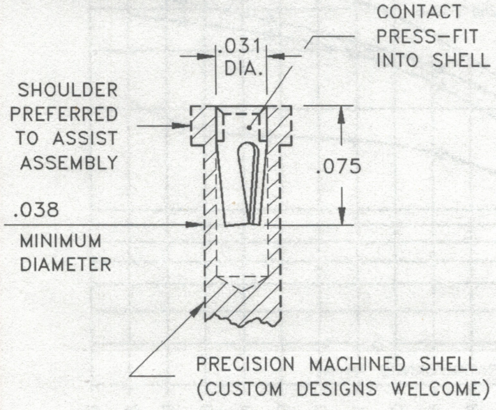

CONTACT
PRESS–FIT
INTO SHELL
.031
DIA.
SHOULDER
PREFERRED
TO ASSIST
ASSEMBLY
.075
.038
MINIMUM
DIAMETER
PRECISION MACHINED SHELL
(CUSTOM DESIGNS WELCOME)

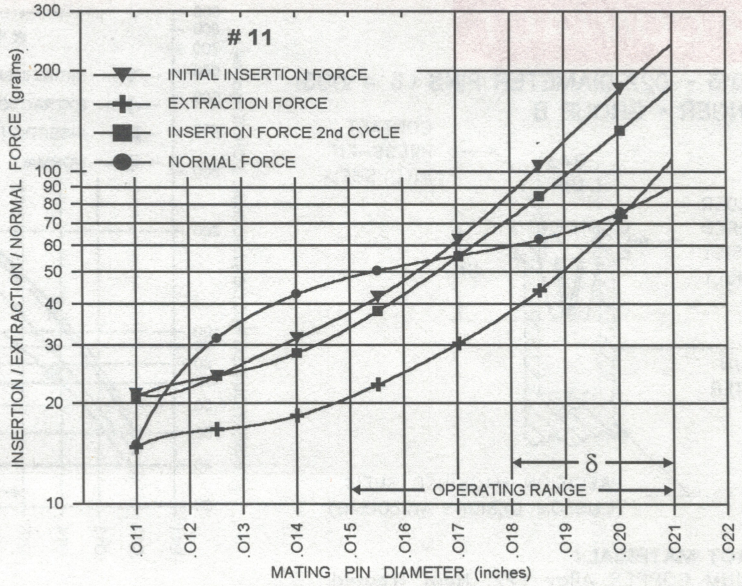

CONTACT MATERIAL:
BERYLLIUM COPPER Alloy 172, Heat Treated

CONTACT DATA

Insertion/ Extraction/ Normal Force Graphs

#21 CONTACT

FOR .015 - .022 DIAMETER PINS (δ = .004)
3 - FINGER • GROUP A

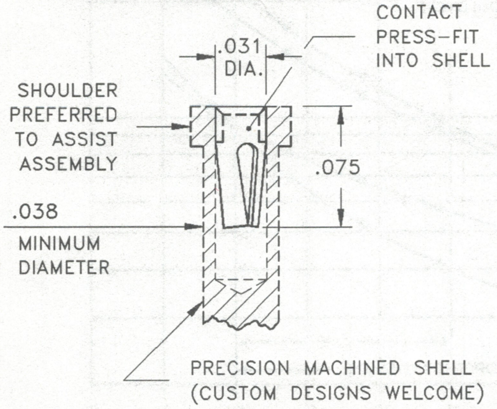

.031 DIA.
CONTACT PRESS-FIT INTO SHELL
SHOULDER PREFERRED TO ASSIST ASSEMBLY
.075
.038
MINIMUM DIAMETER
PRECISION MACHINED SHELL (CUSTOM DESIGNS WELCOME)

CONTACT MATERIAL:
BERYLLIUM COPPER Alloy 172, Heat Treated

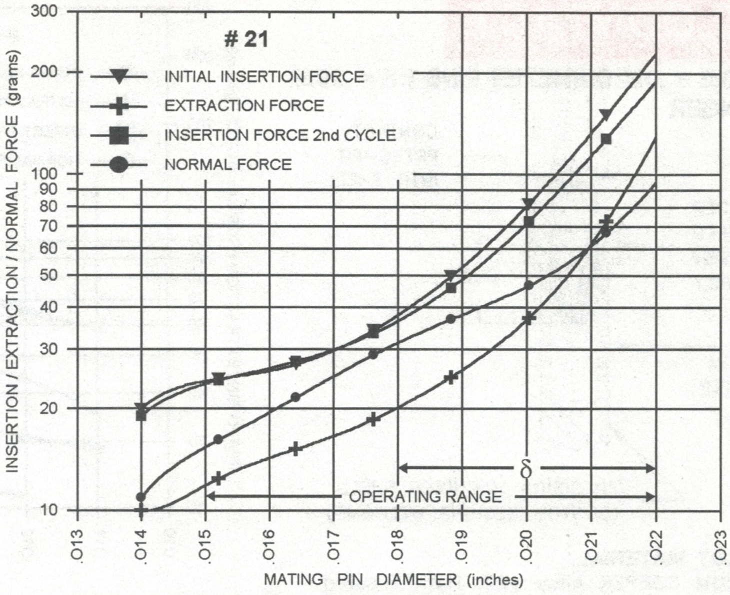

#05 CONTACT

FOR .015 - .022 DIAMETER PINS (δ = .004)
3 - FINGER • GROUP A

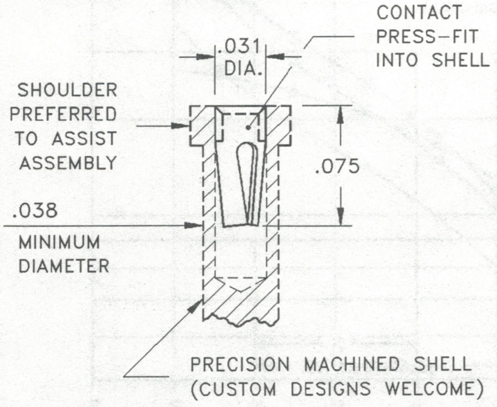

.031 DIA.
CONTACT PRESS-FIT INTO SHELL
SHOULDER PREFERRED TO ASSIST ASSEMBLY
.075
.038
MINIMUM DIAMETER
PRECISION MACHINED SHELL (CUSTOM DESIGNS WELCOME)

CONTACT MATERIAL:
BERYLLIUM COPPER Alloy 172, Heat Treated

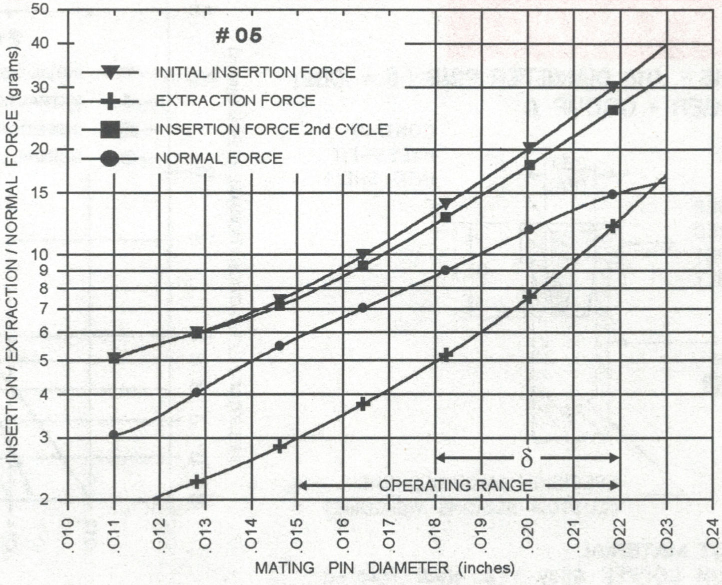

#12 CONTACT

FOR .015 - .022 DIAMETER PINS (δ = .003)
4 - FINGER • GROUP B

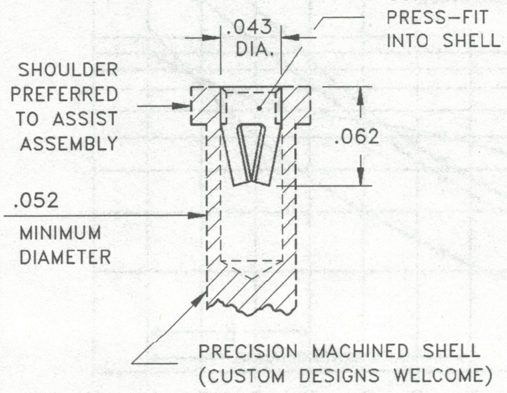

.043 DIA.
CONTACT PRESS-FIT INTO SHELL
SHOULDER PREFERRED TO ASSIST ASSEMBLY
.062
.052
MINIMUM DIAMETER
PRECISION MACHINED SHELL (CUSTOM DESIGNS WELCOME)

CONTACT MATERIAL:
BERYLLIUM COPPER Alloy 172, Heat Treated

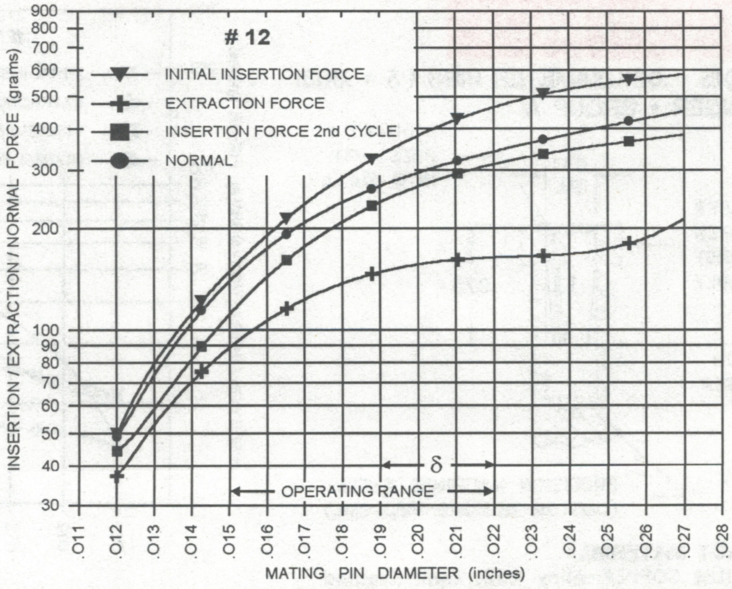

CONTACT DATA
Insertion/ Extraction/ Normal Force Graphs

#22 CONTACT

FOR .015 - .022 DIAMETER PINS (δ = .005)
6 - FINGER • GROUP B

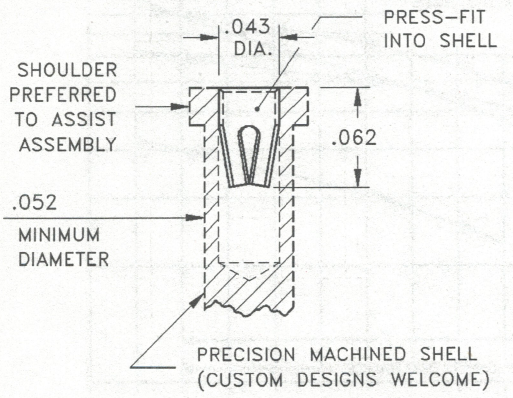

CONTACT
PRESS–FIT
INTO SHELL
.043
DIA.
SHOULDER
PREFERRED
TO ASSIST
ASSEMBLY
.062
.052
MINIMUM
DIAMETER
PRECISION MACHINED SHELL
(CUSTOM DESIGNS WELCOME)

CONTACT MATERIAL:
BERYLLIUM COPPER Alloy 172, Heat Treated

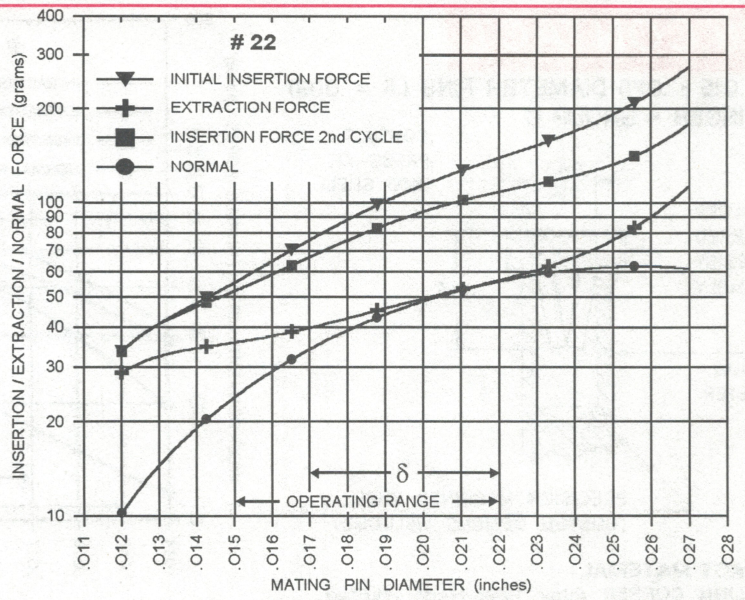

#30 CONTACT

FOR .015 - .025 DIAMETER PINS (δ = .005)
4 - FINGER • GROUP C

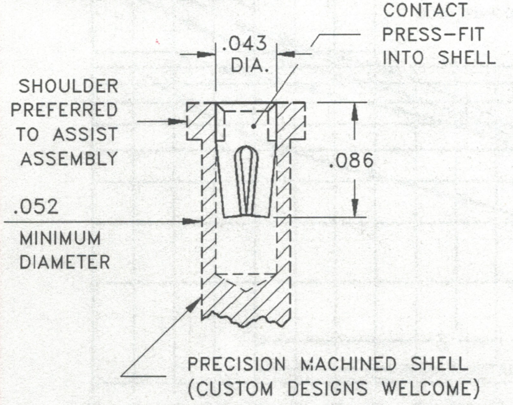

CONTACT
PRESS–FIT
INTO SHELL
.043
DIA.
SHOULDER
PREFERRED
TO ASSIST
ASSEMBLY
.086
.052
MINIMUM
DIAMETER
PRECISION MACHINED SHELL
(CUSTOM DESIGNS WELCOME)

CONTACT MATERIAL:
BERYLLIUM COPPER Alloy 172, Heat Treated

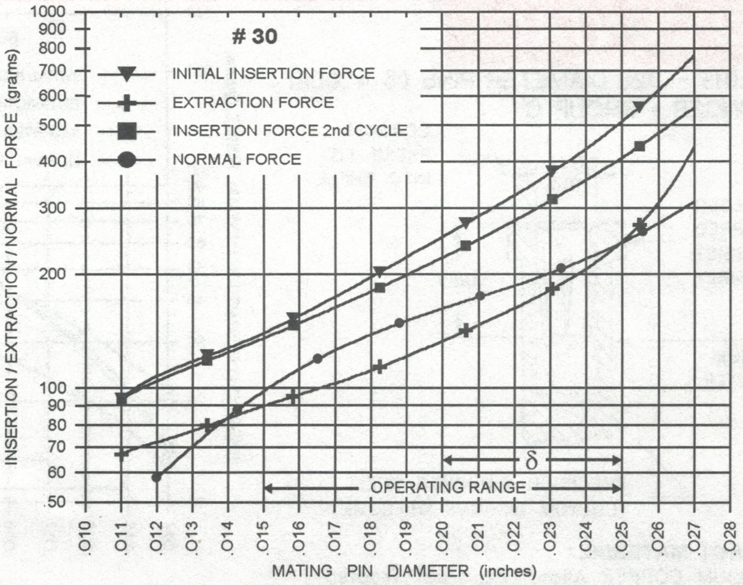

#38 CONTACT

FOR .015 - .025 DIAMETER PINS (δ = .004)
4 - FINGER • GROUP C

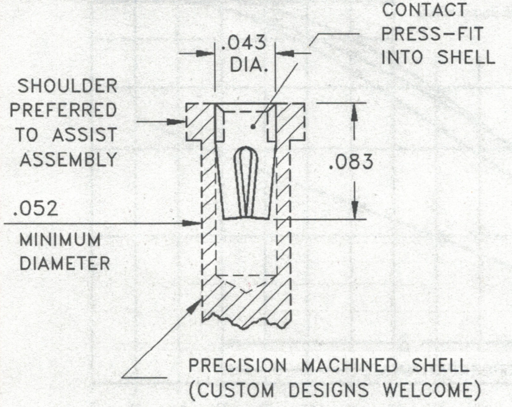

CONTACT
PRESS–FIT
INTO SHELL
.043
DIA.
SHOULDER
PREFERRED
TO ASSIST
ASSEMBLY
.083
.052
MINIMUM
DIAMETER
PRECISION MACHINED SHELL
(CUSTOM DESIGNS WELCOME)

CONTACT MATERIAL:
BERYLLIUM NICKEL Alloy 440, Heat Treated

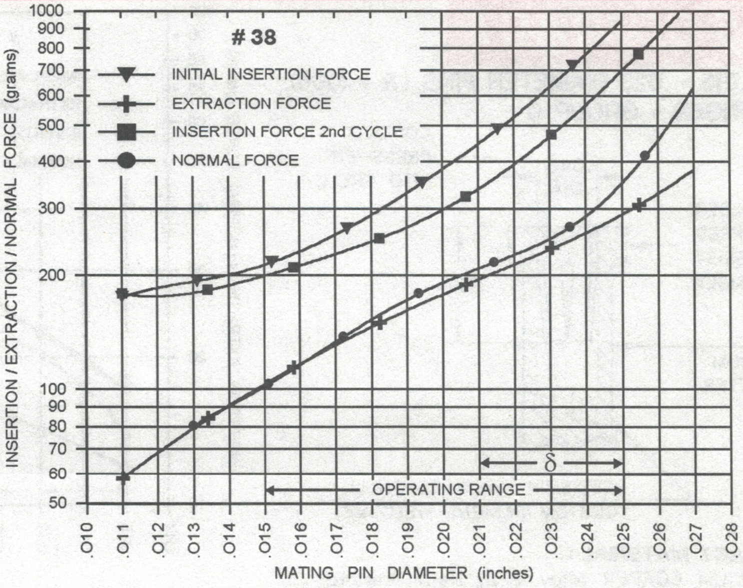

CONTACT DATA

Insertion/ Extraction/ Normal Force Graphs

#20 CONTACT

FOR .015 - .025 DIAMETER PINS (δ = .009)
4 - FINGER • GROUP C

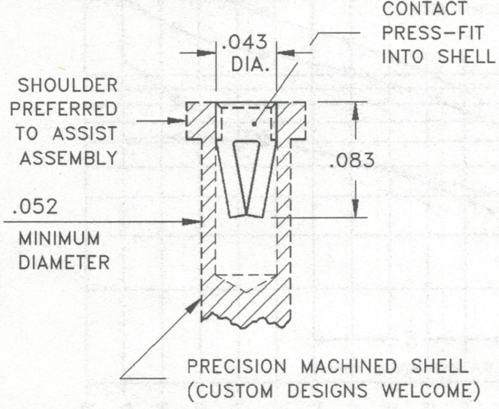

CONTACT
PRESS-FIT
INTO SHELL
.043
DIA.
SHOULDER
PREFERRED
TO ASSIST
ASSEMBLY
.083
.052
MINIMUM
DIAMETER
PRECISION MACHINED SHELL
(CUSTOM DESIGNS WELCOME)

CONTACT MATERIAL:
BERYLLIUM COPPER Alloy 172, Heat Treated

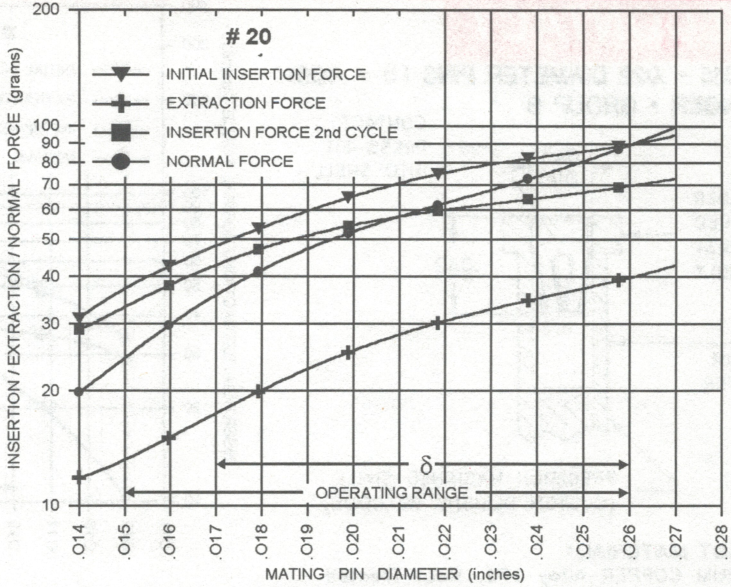

#32 CONTACT

FOR .015 - .026 DIAMETER PINS (δ = .009)
6 - FINGER • GROUP C

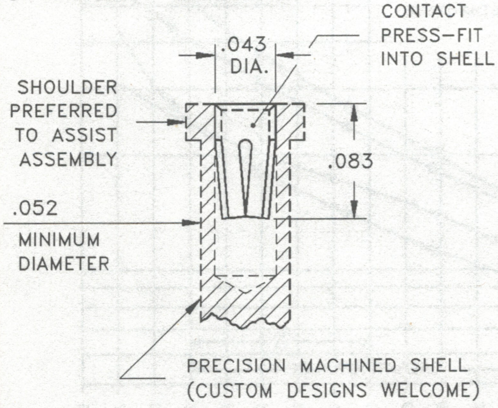

CONTACT
PRESS-FIT
INTO SHELL
.043
DIA.
SHOULDER
PREFERRED
TO ASSIST
ASSEMBLY
.083
.052
MINIMUM
DIAMETER
PRECISION MACHINED SHELL
(CUSTOM DESIGNS WELCOME)

CONTACT MATERIAL:
BERYLLIUM COPPER Alloy 172, Heat Treated

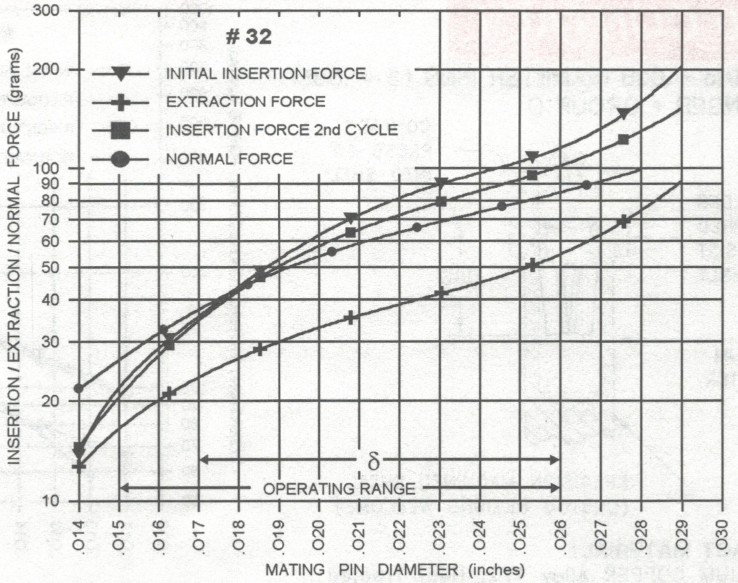

#35 CONTACT

FOR .015 - .026 DIAMETER PINS (δ = .008)
6 - FINGER • GROUP C

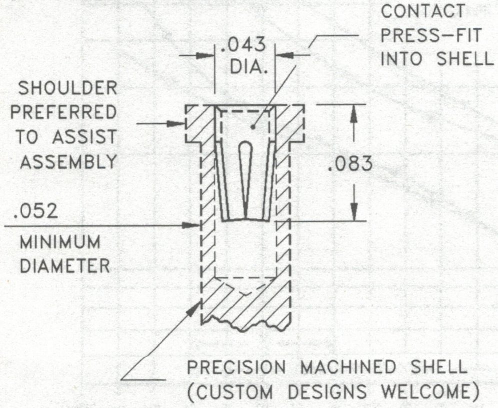

CONTACT
PRESS-FIT
INTO SHELL
.043
DIA.
SHOULDER
PREFERRED
TO ASSIST
ASSEMBLY
.083
.052
MINIMUM
DIAMETER
PRECISION MACHINED SHELL
(CUSTOM DESIGNS WELCOME)

CONTACT MATERIAL:
BERYLLIUM COPPER Alloy 172, Heat Treated

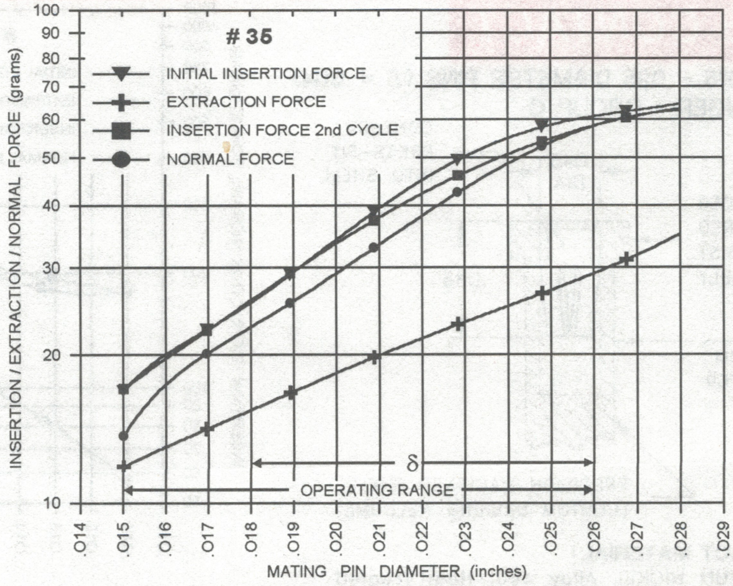

MILL-MAX®

CONTACT DATA

Insertion/ Extraction/ Normal Force Graphs

#43 CONTACT

FOR .015 - .026 DIAMETER PINS (δ = .008)
6 - FINGER • GROUP C

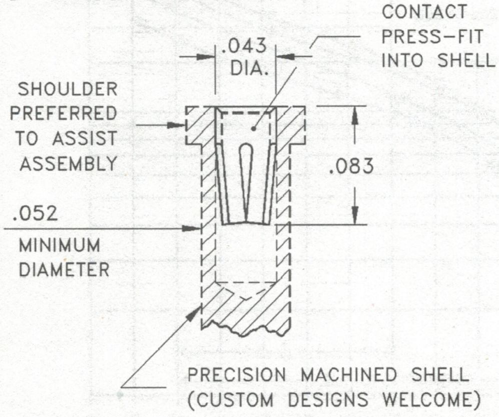

CONTACT PRESS–FIT INTO SHELL
.043 DIA.
SHOULDER PREFERRED TO ASSIST ASSEMBLY
.083
.052 MINIMUM DIAMETER
PRECISION MACHINED SHELL (CUSTOM DESIGNS WELCOME)

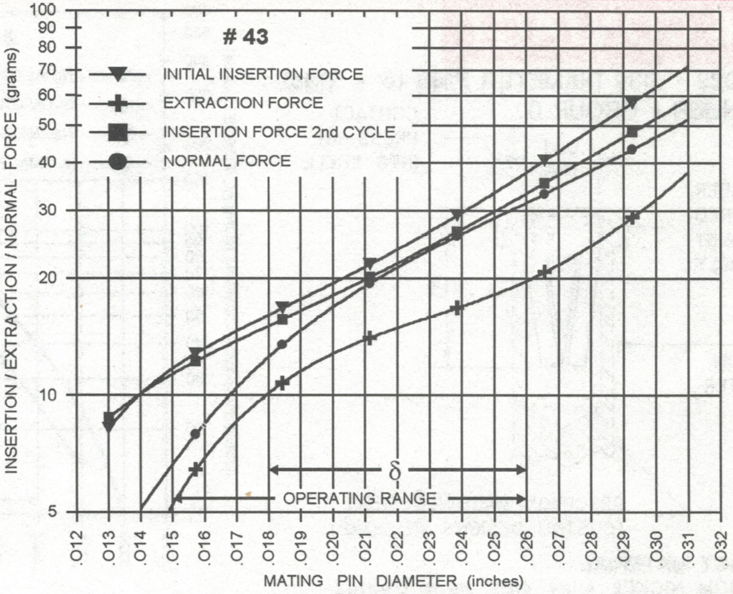

CONTACT MATERIAL:
BERYLLIUM COPPER Alloy 172, Heat Treated

#15 CONTACT

FOR .022 - .032 DIAMETER PINS (δ = .004)
6 - FINGER

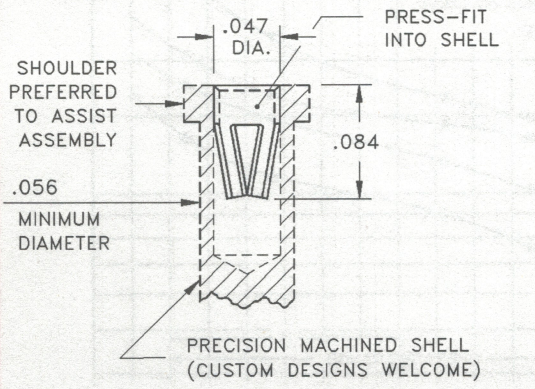

CONTACT PRESS–FIT INTO SHELL
.047 DIA.
SHOULDER PREFERRED TO ASSIST ASSEMBLY
.084
.056 MINIMUM DIAMETER
PRECISION MACHINED SHELL (CUSTOM DESIGNS WELCOME)

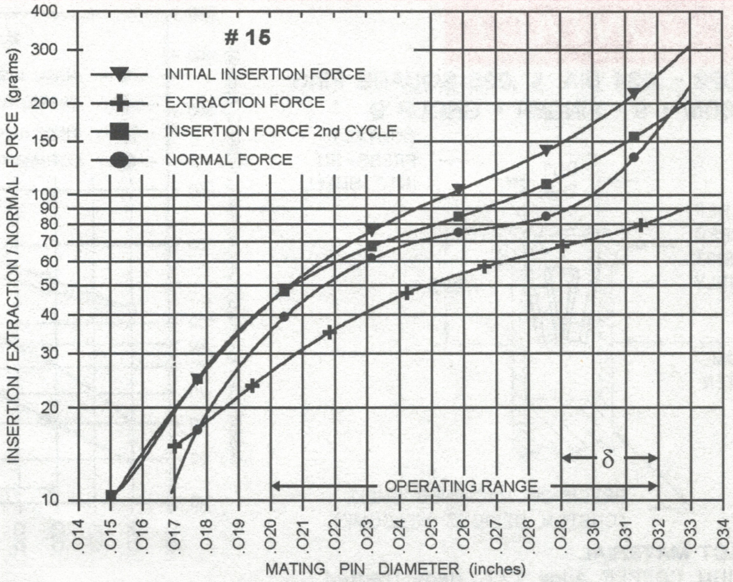

CONTACT MATERIAL:
BERYLLIUM COPPER Alloy 172, Heat Treated

#06 CONTACT

FOR .022 - .032 DIAMETER PINS (δ = .007)
4 - FINGER • GROUP D

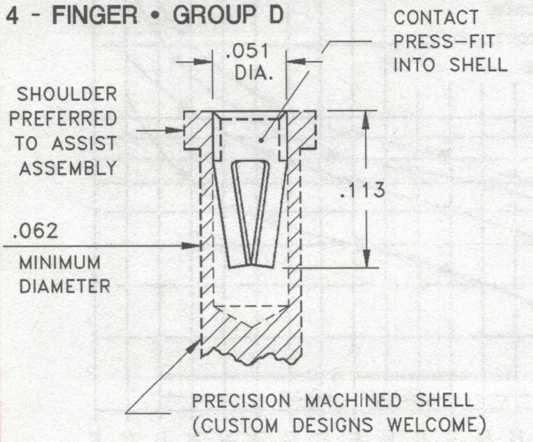

CONTACT PRESS–FIT INTO SHELL
.051 DIA.
SHOULDER PREFERRED TO ASSIST ASSEMBLY
.113
.062 MINIMUM DIAMETER
PRECISION MACHINED SHELL (CUSTOM DESIGNS WELCOME)

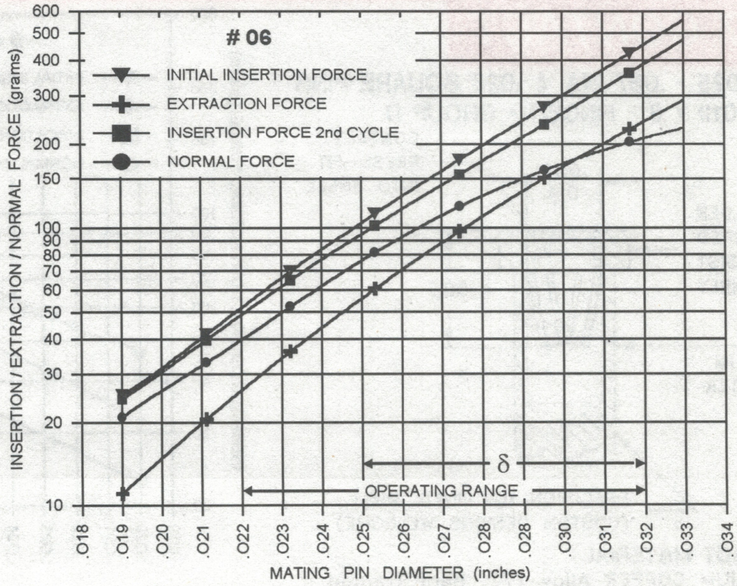

CONTACT MATERIAL:
BERYLLIUM COPPER Alloy 172, Heat Treated

CONTACT DATA

Insertion/ Extraction/ Normal Force Graphs

#26 CONTACT

FOR .022 - .032 DIAMETER PINS (δ = .005)
4 - FINGER • GROUP D

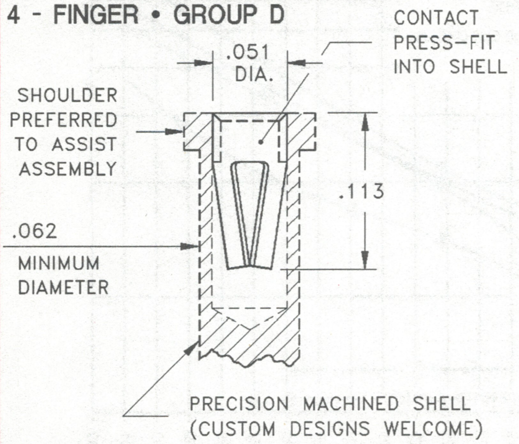
CONTACT
PRESS-FIT
INTO SHELL
.051
DIA.
SHOULDER
PREFERRED
TO ASSIST
ASSEMBLY
.113
.062
MINIMUM
DIAMETER
PRECISION MACHINED SHELL
(CUSTOM DESIGNS WELCOME)

CONTACT MATERIAL:
BERYLLIUM NICKEL Alloy 440, Heat Treated

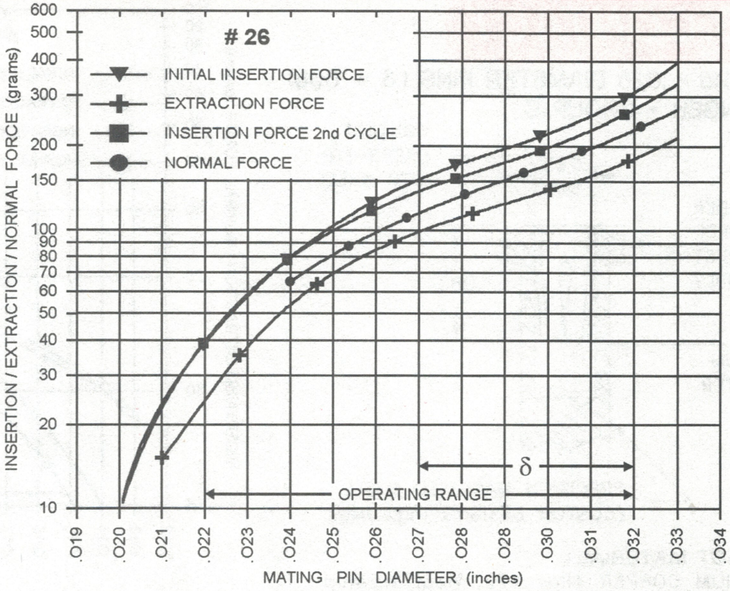

#16 CONTACT

FOR .022 - .034 DIA. & .025 SQUARE PINS
(δ = .006) • 6 - FINGER • GROUP D

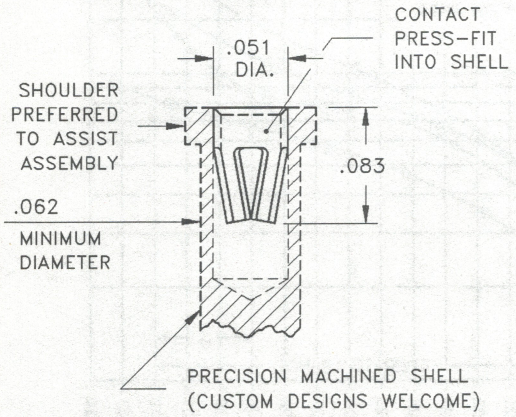
CONTACT
PRESS-FIT
INTO SHELL
.051
DIA.
SHOULDER
PREFERRED
TO ASSIST
ASSEMBLY
.083
.062
MINIMUM
DIAMETER
PRECISION MACHINED SHELL
(CUSTOM DESIGNS WELCOME)

CONTACT MATERIAL:
BERYLLIUM COPPER Alloy 172, Heat Treated

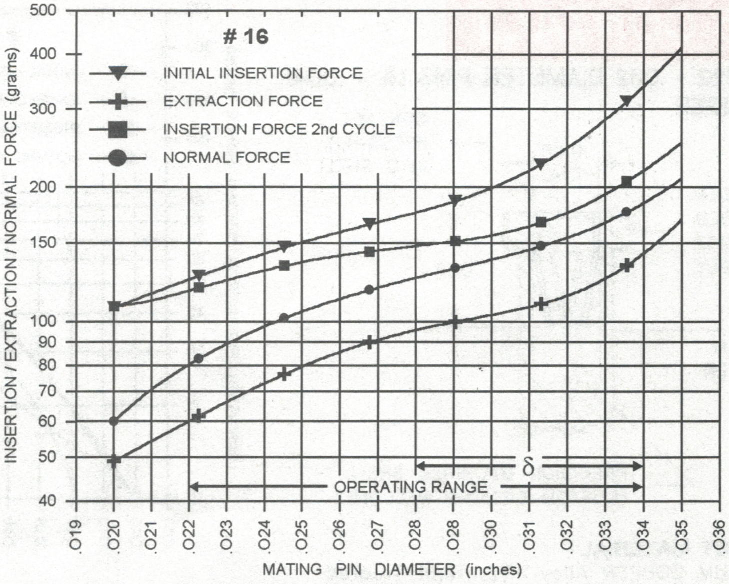

#47 CONTACT

FOR .025 - .037 DIA. & .025 SQUARE PINS
(δ = .011) • 6 - FINGER • GROUP D

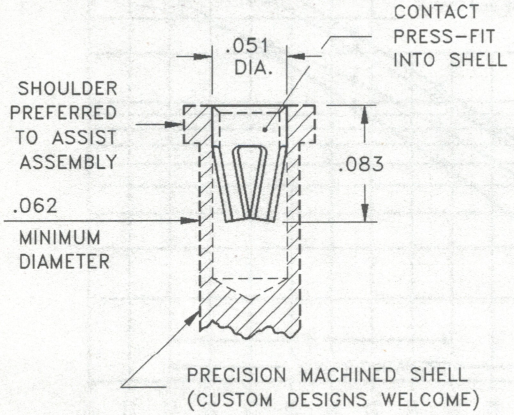
CONTACT
PRESS-FIT
INTO SHELL
.051
DIA.
SHOULDER
PREFERRED
TO ASSIST
ASSEMBLY
.083
.062
MINIMUM
DIAMETER
PRECISION MACHINED SHELL
(CUSTOM DESIGNS WELCOME)

CONTACT MATERIAL:
BERYLLIUM COPPER Alloy 172, Heat Treated

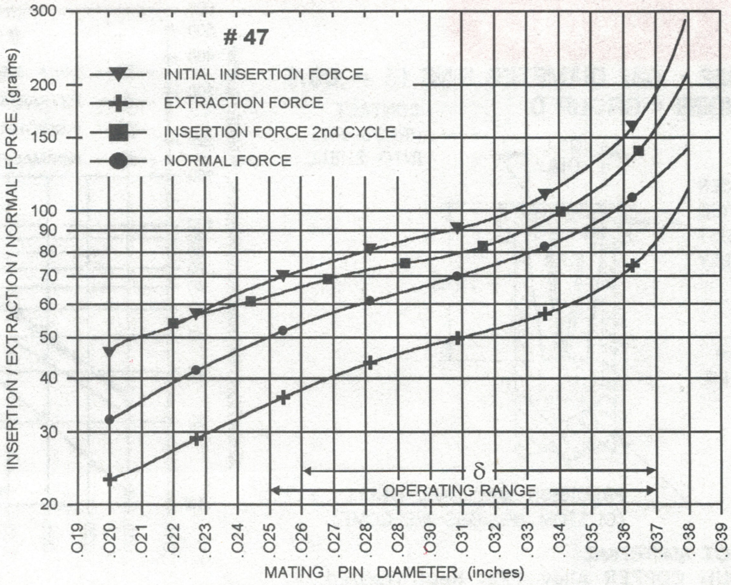

MILL-MAX®

CONTACT DATA

Insertion/ Extraction/ Normal Force Graphs

#18 CONTACT

FOR .037 - .043 DIAMETER PINS (δ = .004)
6 - FINGER

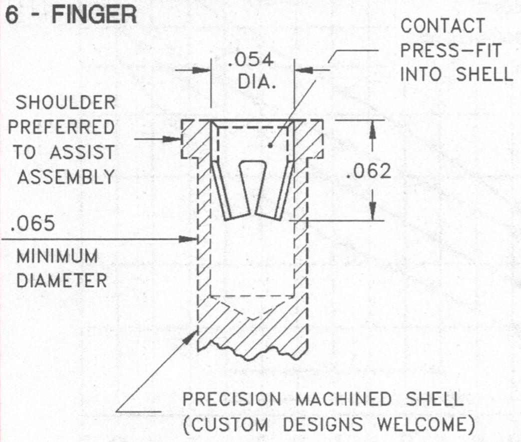
.054
DIA.
CONTACT
PRESS-FIT
INTO SHELL
SHOULDER
PREFERRED
TO ASSIST
ASSEMBLY
.062
.065
MINIMUM
DIAMETER
PRECISION MACHINED SHELL
(CUSTOM DESIGNS WELCOME)

CONTACT MATERIAL:
BERYLLIUM COPPER Alloy 172, Heat Treated

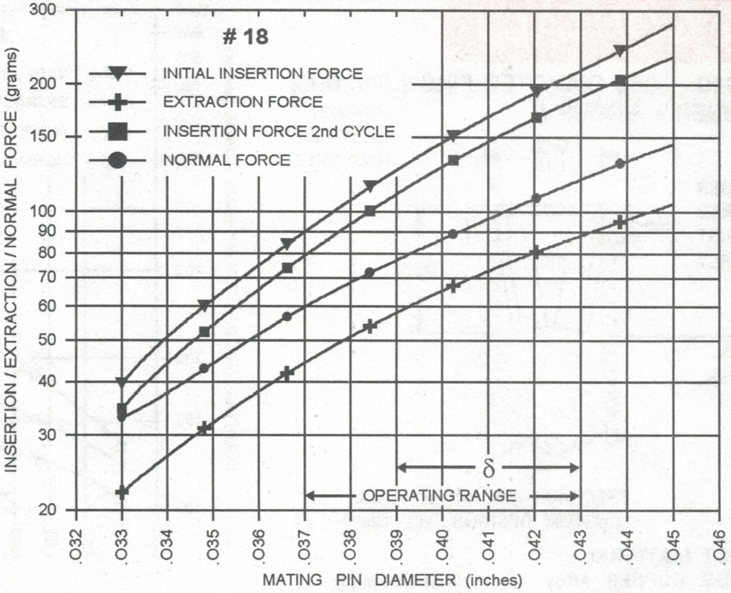

#34 CONTACT

FOR .032 - .047 DIAMETER PINS (δ = .010)
4 - FINGER • GROUP E

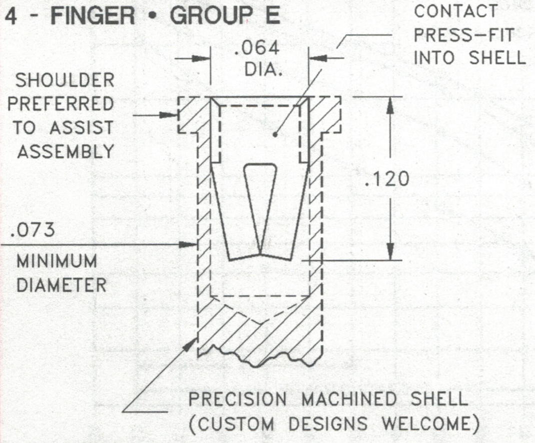
.064
DIA.
CONTACT
PRESS-FIT
INTO SHELL
SHOULDER
PREFERRED
TO ASSIST
ASSEMBLY
.120
.073
MINIMUM
DIAMETER
PRECISION MACHINED SHELL
(CUSTOM DESIGNS WELCOME)

CONTACT MATERIAL:
BERYLLIUM COPPER Alloy 172, Heat Treated

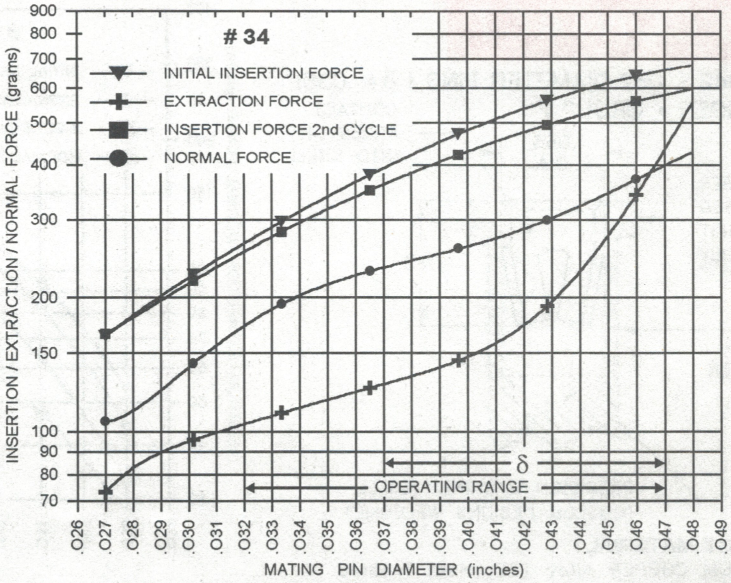

#24 CONTACT

FOR .032 - .047 DIAMETER PINS (δ = .009)
4 - FINGER • GROUP E

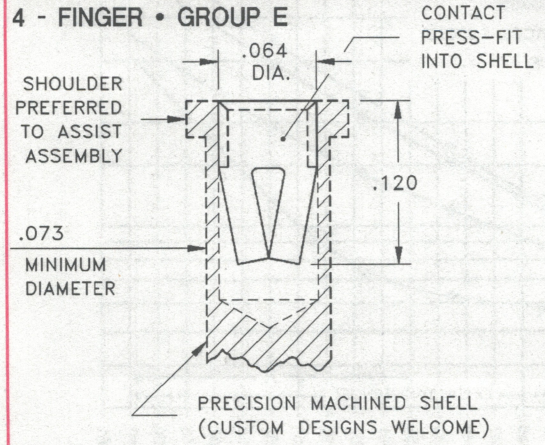
.064
DIA.
CONTACT
PRESS-FIT
INTO SHELL
SHOULDER
PREFERRED
TO ASSIST
ASSEMBLY
.120
.073
MINIMUM
DIAMETER
PRECISION MACHINED SHELL
(CUSTOM DESIGNS WELCOME)

CONTACT MATERIAL:
BERYLLIUM NICKEL Alloy 440, Heat Treated

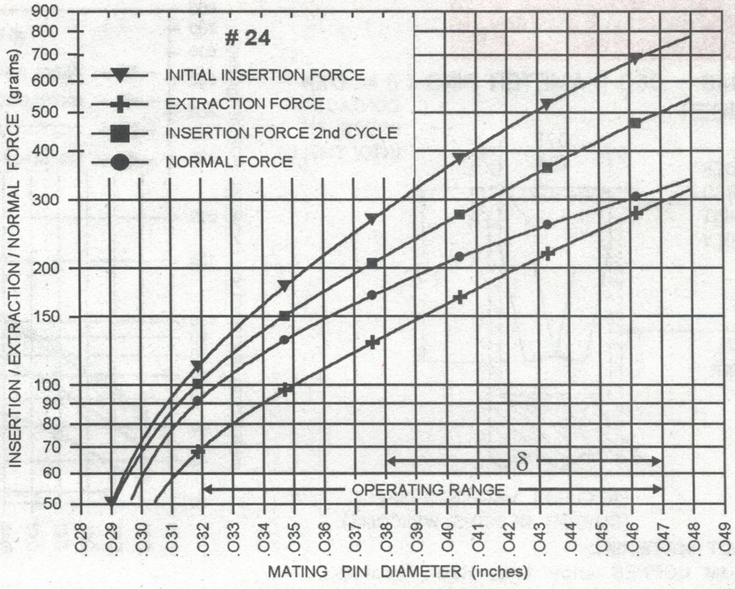

CONTACT DATA

Insertion/ Extraction/ Normal Force Graphs

#02 CONTACT

FOR .040 - .050 DIAMETER PINS (δ = .006)
6 - FINGER • GROUP F

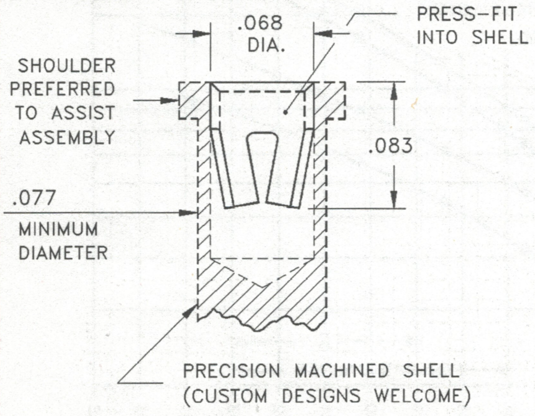
CONTACT
PRESS-FIT
INTO SHELL
.068
DIA.
SHOULDER
PREFERRED
TO ASSIST
ASSEMBLY
.083
.077
MINIMUM
DIAMETER
PRECISION MACHINED SHELL
(CUSTOM DESIGNS WELCOME)

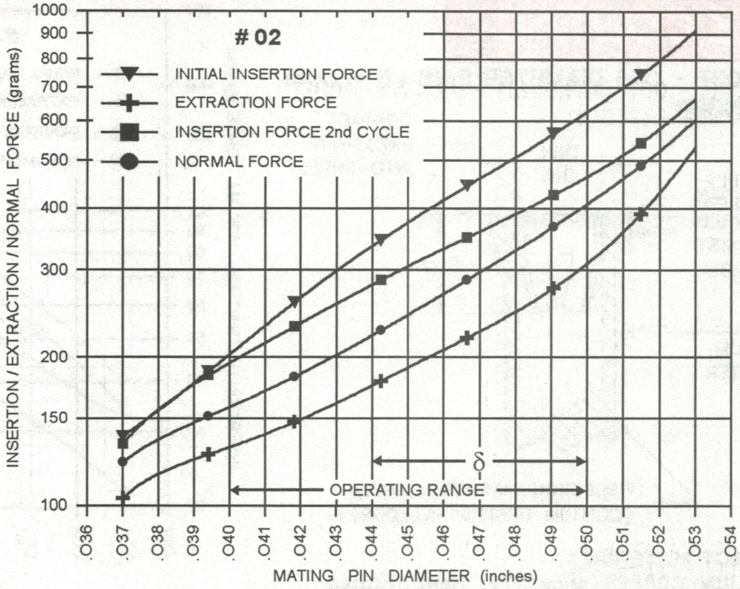

CONTACT MATERIAL:
BERYLLIUM COPPER Alloy 172, Heat Treated

#28 CONTACT

FOR .042 - .052 DIAMETER PINS (δ = .005)
4 - FINGER • GROUP F

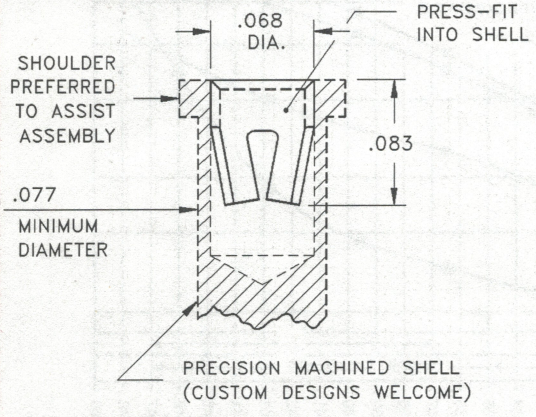
CONTACT
PRESS-FIT
INTO SHELL
.068
DIA.
SHOULDER
PREFERRED
TO ASSIST
ASSEMBLY
.083
.077
MINIMUM
DIAMETER
PRECISION MACHINED SHELL
(CUSTOM DESIGNS WELCOME)

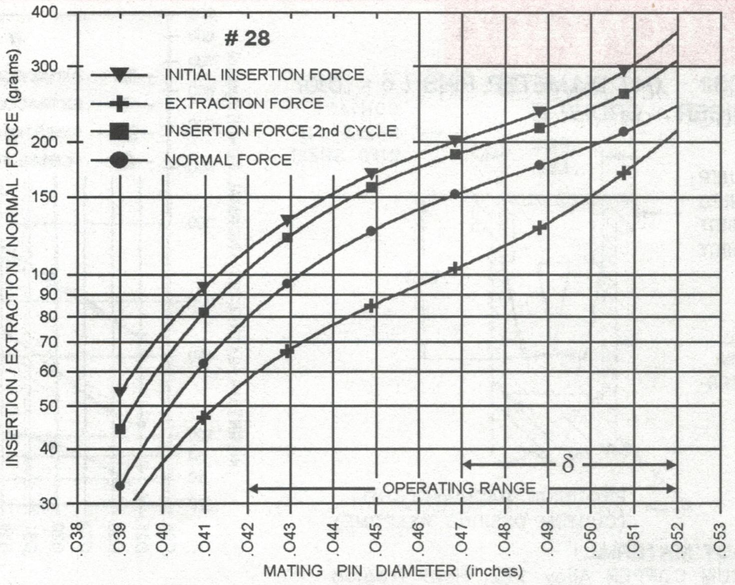

CONTACT MATERIAL:
BERYLLIUM COPPER Alloy 172, Heat Treated

#03 CONTACT

FOR .040 - .060 DIAMETER PINS (δ = .010)
4 - FINGER

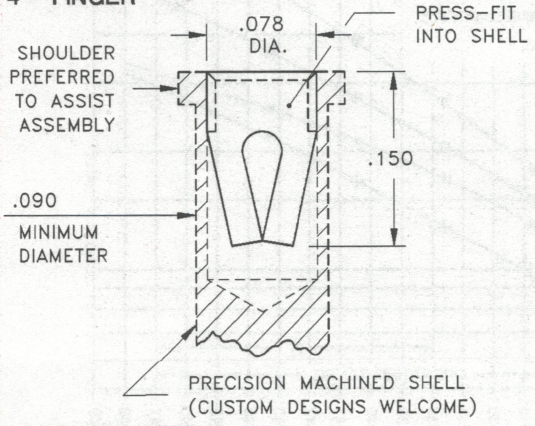
CONTACT
PRESS-FIT
INTO SHELL
.078
DIA.
SHOULDER
PREFERRED
TO ASSIST
ASSEMBLY
.150
.090
MINIMUM
DIAMETER
PRECISION MACHINED SHELL
(CUSTOM DESIGNS WELCOME)

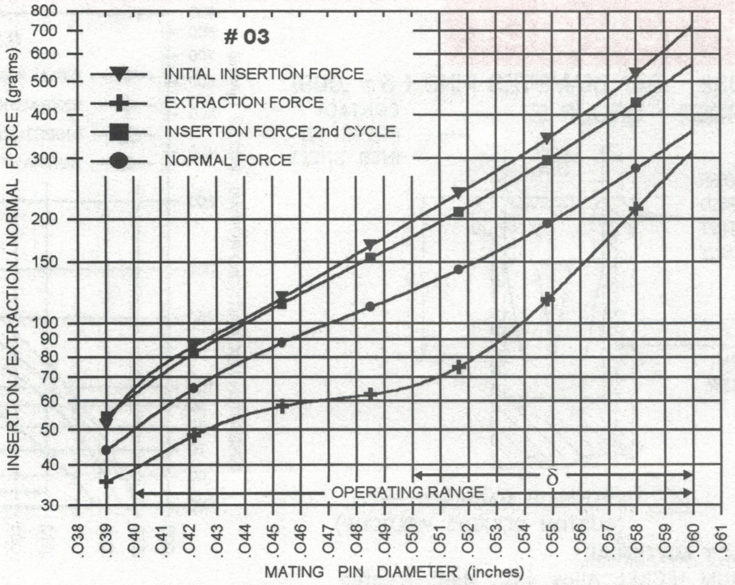

CONTACT MATERIAL:
BERYLLIUM COPPER Alloy 172, Heat Treated

CONTACT DATA

Insertion/ Extraction/ Normal Force Graphs

#23 CONTACT

FOR .045 - .067 DIAMETER PINS (δ = .008)
6 - FINGER • GROUP G

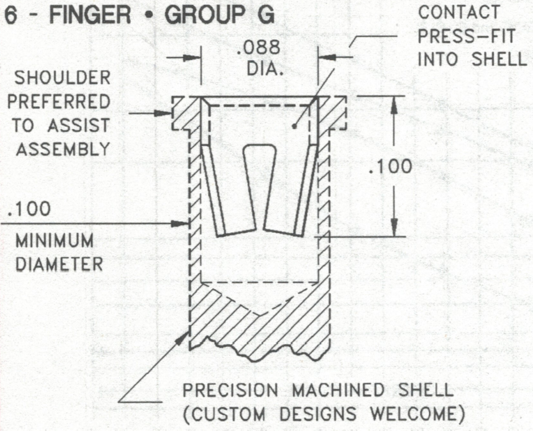
.088
DIA.
CONTACT
PRESS–FIT
INTO SHELL
SHOULDER
PREFERRED
TO ASSIST
ASSEMBLY
.100
.100
MINIMUM
DIAMETER
PRECISION MACHINED SHELL
(CUSTOM DESIGNS WELCOME)

CONTACT MATERIAL:
BERYLLIUM COPPER Alloy 172, Heat Treated

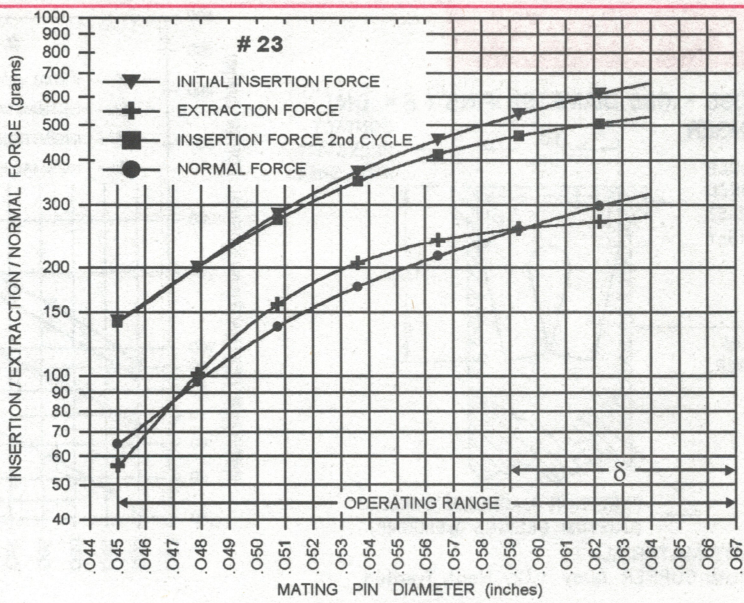

#13 CONTACT

FOR .048 - .064 DIAMETER PINS (δ = .010)
4 - FINGER • GROUP G

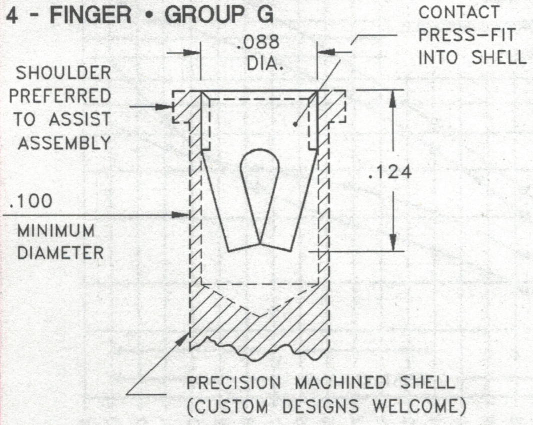
.088
DIA.
CONTACT
PRESS–FIT
INTO SHELL
SHOULDER
PREFERRED
TO ASSIST
ASSEMBLY
.124
.100
MINIMUM
DIAMETER
PRECISION MACHINED SHELL
(CUSTOM DESIGNS WELCOME)

CONTACT MATERIAL:
BERYLLIUM COPPER Alloy 172, Heat Treated

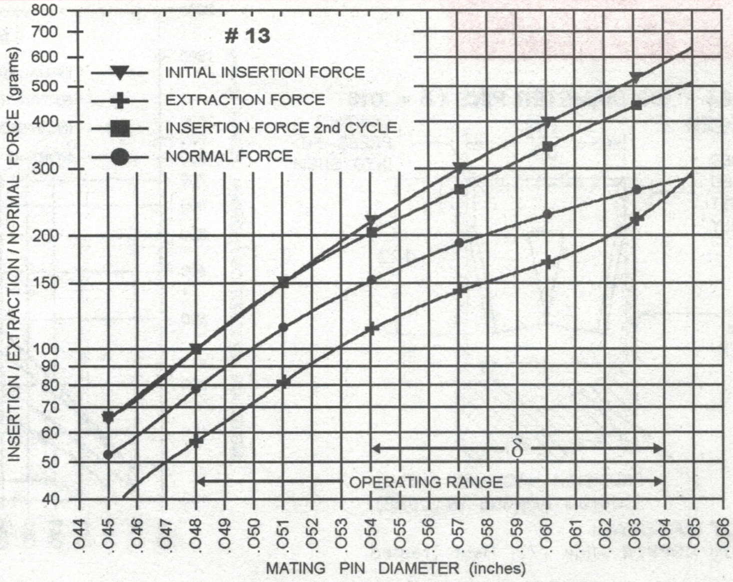

#07 CONTACT

FOR .065 - .082 DIAMETER PINS (δ = .013)
4 - FINGER

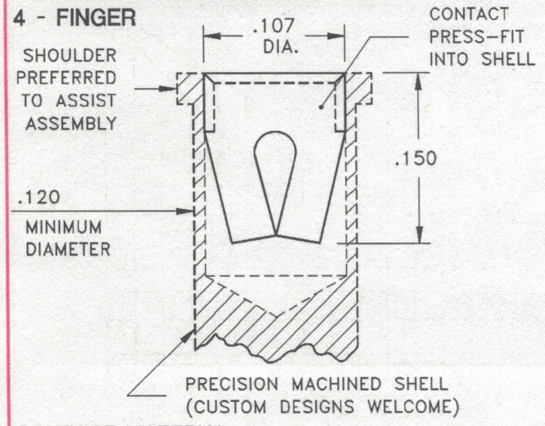
.107
DIA.
CONTACT
PRESS–FIT
INTO SHELL
SHOULDER
PREFERRED
TO ASSIST
ASSEMBLY
.150
.120
MINIMUM
DIAMETER
PRECISION MACHINED SHELL
(CUSTOM DESIGNS WELCOME)

CONTACT MATERIAL:
BERYLLIUM COPPER Alloy 172, Heat Treated

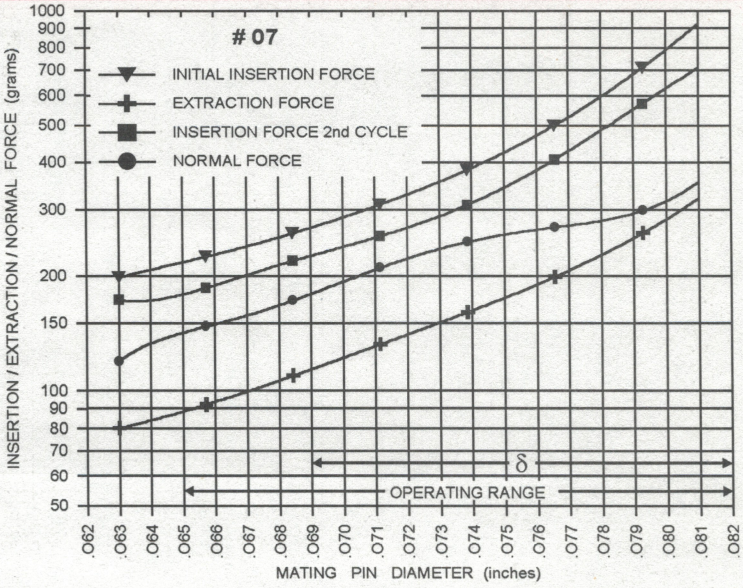

CONTACT DATA

Insertion/ Extraction/ Normal Force Graphs

#14 CONTACT

FOR .065 - .085 DIAMETER PINS (δ = .014)
4 - FINGER

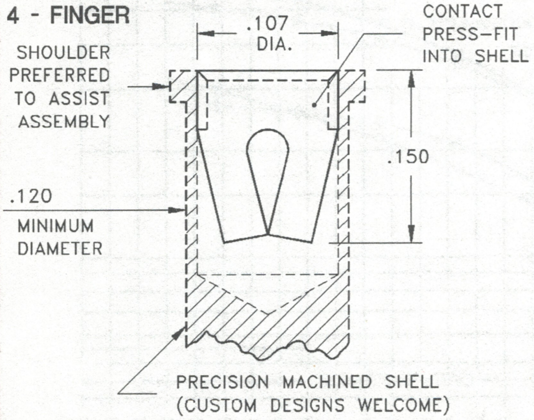

.107
DIA.
CONTACT
PRESS-FIT
INTO SHELL
SHOULDER
PREFERRED
TO ASSIST
ASSEMBLY
.150
.120
MINIMUM
DIAMETER
PRECISION MACHINED SHELL
(CUSTOM DESIGNS WELCOME)

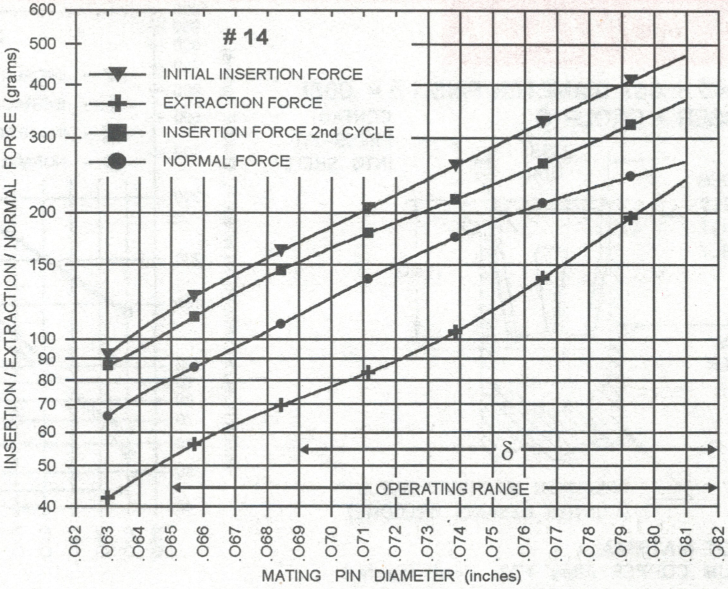

CONTACT MATERIAL:
BERYLLIUM COPPER Alloy 172, Heat Treated

#08 CONTACT

FOR .084 - .102 DIAMETER PINS (δ = .011)
6 - FINGER

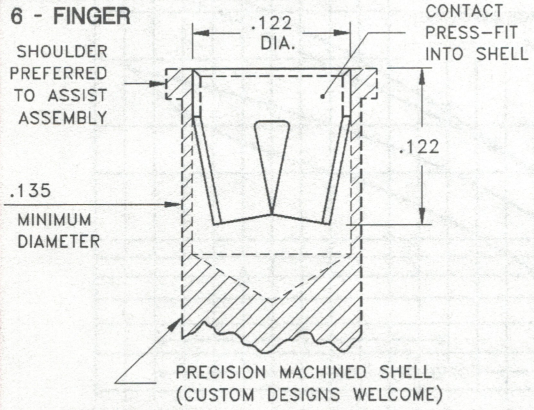

.122
DIA.
CONTACT
PRESS-FIT
INTO SHELL
SHOULDER
PREFERRED
TO ASSIST
ASSEMBLY
.122
.135
MINIMUM
DIAMETER
PRECISION MACHINED SHELL
(CUSTOM DESIGNS WELCOME)

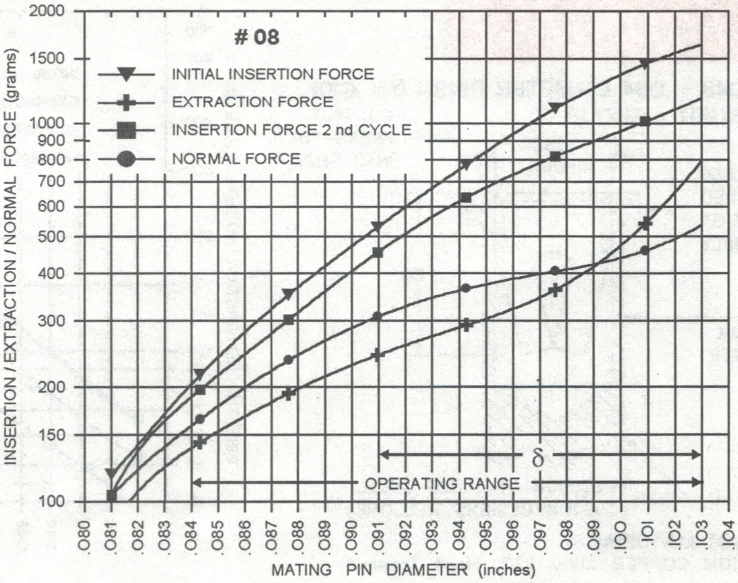

CONTACT MATERIAL:
BERYLLIUM COPPER Alloy 172, Heat Treated

MILL-MAX®

CUSTOM PIN/RECEPTACLE WORKSHEET

PHOTOCOPY THIS PAGE AND FAX OR MAIL TO MILL-MAX FOR A PROMPT QUOTATION

FROM:

NAME:__________________________ **TITLE:**__________

COMPANY:__________________________ **DATE:**__________

ADDRESS:__________________________ **PHONE#:**__________

__________________________ **FAX#:**__________

QUANTITIES TO QUOTE:__________________________

SPECIFICATIONS OF MACHINED PINS, TERMINALS, RECEPTACLE SHELLS, etc.

SIMILAR MILL-MAX PART #:__________

MATERIAL:
- ☐ BRASS
- ☐ PHOSPHOR BRONZE

(check available stock sizes on page 81)

FINISH:
- ☐ TIN over NICKEL
- ☐ TIN/LEAD over COPPER
- ☐ ______μ" GOLD over NICKEL
- ☐ SILVER over COPPER
- ☐ OTHER:__________

STANDARD MACHINING TOLERANCES ARE ± .002" FOR DIAMETERS, ±.005" FOR LENGTHS. IF TIGHTER TOLERANCES ARE REQUIRED, PLEASE SPECIFY CRITICAL DIMENSIONS ON SKETCH BELOW.

ADDITIONAL SPECIFICATIONS FOR RECEPTACLE ONLY

SIZE OF MATING PIN OR COMPONENT LEAD:__________
(round/square/rectangular)

LENGTH OF MATING PIN/LEAD:__________

USE MILL-MAX CONTACT TYPE #:__________
(see page 153 for selector chart)

REQUIRED INSERTION/ EXTRACTION FORCES: ☐ LOW ☐ MEDIUM ☐ HIGH

CONTACT FINISH:
- ☐ TIN over NICKEL
- ☐ ______μ" GOLD over NICKEL
- ☐ OTHER:__________

ARE THERE ANY UNUSUAL REQUIREMENTS SUCH AS HIGH OPERATING TEMPERATURE OR CURRENT RATING?

____

____

IF YOU NEED ASSISTANCE, PLEASE CALL MILL-MAX AND ASK FOR AN APPLICATIONS ENGINEER

INDEX

NUMERICAL LISTING AND LOCATION OF MILL-MAX ASSEMBLY NUMBERS WITH REFERENCE TO MILL-MAX PINS

MILL-MAX ASSEMBLY NUMBER	MILL-MAX PIN REF	PAGE
104-XX-XXX-41-770	0477-0	16
104-XX-XXX-41-780	0478-0	16
110-XX-064-01-505	1001-0	60
110-XX-314-10-001	1001-0	60
110-XX-314-10-002	1001-0	60
110-XX-316-10-003	1001-0	60
110-XX-XXX-41-001	1001-0	11
110-XX-XXX-41-105	1005-0	20
110-XX-XXX-41-605	1005-0	15
110-XX-XXX-41-801	1001-0	18
111-XX-XXX-41-001	0134-0	12
114-XX-XXX-41-117	1434-0	21
115-XX-XXX-41-001	0501-0	13
115-XX-XXX-41-003	0703-0	14
116-XX-XXX-41-001	0153-5	25
116-XX-XXX-41-003	0153-2	25
116-XX-XXX-41-006	0153-1	25
116-XX-XXX-41-007	0153-3	25
116-XX-XXX-41-008	0153-4	25
117-XX-XXX-41-005	1802-0	61
121-XX-XXX-41-001	0040-1	23
122-XX-XXX-41-001	0089-2	23
122-XX-XXX-41-801	0089-2	18
123-XX-XXX-41-001	0088-3	23
123-XX-XXX-41-801	0088-3	18
124-XX-XXX-41-002	0086-4	23
126-XX-XXX-41-001	2601-0	24
126-XX-XXX-41-002	2602-0	24
126-XX-XXX-41-003	2603-0	24
127-XX-XXX-41-002	1702-2	61
127-XX-XXX-41-003	1703-3	61
134-XX-XXX-00-000	3400-0	35
134-XX-XXX-00-010	3401-0	35
134-XX-XXX-00-020	3402-0	35
134-XX-XXX-00-050	3405-0	35
134-XX-XXX-00-100	3410-0	35
142-XX-XXX-00-591	4259-1	36
142-XX-XXX-00-592	4259-2	36
142-XX-XXX-00-593	4259-3	36
142-XX-XXX-00-594	4259-4	36
146-XX-XXX-41-012	4612-0	17
146-XX-XXX-41-013	4613-0	17
150-XX-XXX-00-001	0290-0	30
151-XX-XXX-00-003	5503-0	34
151-XX-XXX-00-004	5504-0	34
151-XX-XXX-00-005	5505-0	34
151-XX-XXX-00-009	5509-0	34
151-XX-XXX-00-010	5510-0	34
151-XX-XXX-00-011	5511-0	34
153-XX-XXX-00-001	5301-0	30
160-XX-XXX-00-001	0282-0	31
162-XX-XXX-00-001	1106-0	31
163-XX-XXX-00-001	1106-3	31
170-XX-XXX-00-001	0700-0	32
173-XX-XXX-00-001	0730-3	32
180-XX-XXX-00-001	8000-0	33
182-XX-XXX-00-001	8301-2	33
183-XX-XXX-00-001	8301-3	33
210-XX-XXX-41-001	1001-0	19
214-XX-XXX-01670799	1434-0	22
214-XX-XXX-01670800	1434-0	22
217-XX-XXX-41-005	1802-0	61
222-XX-XXX-41-001	0089-2	19
223-XX-XXX-41-001	0088-3	19
227-XX-XXX-41-002	1702-2	61
227-XX-XXX-41-003	1703-3	61
299-XX-XXX-10-001	1103/0903	26
299-XX-XXX-10-002	1103/0904	26
299-XX-XXX-11-001	1103/1610	26
299-XX-210-12-001800	1002-X	26
304-XX-XXX-41-770	0477-0	39
304-XX-XXX-41-780	0478-0	39
310-XX-XXX-41-001	1001-0	38
310-XX-XXX-41-001	1001-0	52
310-XX-XXX-41-105	1005-0	54
311-XX-XXX-41-001	0134-0	38
315-XX-XXX-41-001	0501-0	38
315-XX-XXX-41-003	0703-4	38
316-XX-XXX-41-001	0153-5	38
316-XX-XXX-41-003	0153-2	38
316-XX-XXX-41-006	0153-1	38
316-XX-XXX-41-007	0153-3	38
316-XX-XXX-41-008	0153-4	38
317-XX-XXX-41-005	1802-0	61
321-XX-XXX-41-001	0040-1	39
322-XX-XXX-41-001	0089-2	39
323-XX-XXX-41-001	0088-3	39
324-XX-XXX-41-002	0086-4	39
326-XX-XXX-41-001	2601-0	39
326-XX-XXX-41-002	2602-0	39
326-XX-XXX-41-003	2603-0	39
327-XX-XXX-41-002	1702-2	61
327-XX-XXX-41-003	1703-3	61
334-XX-XXX-00-000	3400-0	43
334-XX-XXX-00-010	3401-0	43
334-XX-XXX-00-020	3402-0	43
334-XX-XXX-00-050	3405-0	43
334-XX-XXX-00-100	3410-0	43
335-XX-XXX-00-160	3516-0	53
342-XX-XXX-00-591	4259-1	43
342-XX-XXX-00-592	4259-2	43
342-XX-XXX-00-593	4259-3	43
342-XX-XXX-00-594	4259-4	43
346-XX-XXX-41-012	4612-0	39
346-XX-XXX-41-013	4613-0	39
350-XX-XXX-00-001	0290-0	44
350-XX-XXX-00-006	3404-0	52
350-XX-XXX-01-106	3404-0	54
351-XX-XXX-00-003	5503-0	43
351-XX-XXX-00-004	5504-0	43
351-XX-XXX-00-005	5505-0	43
351-XX-XXX-00-009	5509-0	43
351-XX-XXX-00-010	5510-0	43
351-XX-XXX-00-011	5511-0	43
353-XX-XXX-00-001	5301-0	44
360-XX-XXX-00-001	0282-0	44
362-XX-XXX-00-001	1106-2	44
363-XX-XXX-00-001	1106-3	44
364-XX-XXX-00-580	6458-0	53
370-XX-XXX-00-001	0700-0	44
373-XX-XXX-00-001	0730-0	44
380-XX-XXX-00-001	8000-0	44

INDEX

NUMERICAL LISTING AND LOCATION OF MILL-MAX ASSEMBLY NUMBERS WITH REFERENCE TO MILL-MAX PINS

MILL-MAX ASSEMBLY NUMBER	MILL-MAX PIN REF	PAGE
382-XX-XXX-00-001	8301-2	44
383-XX-XXX-00-001	8301-3	44
399-XX-XXX-10-003	1103-0	52
399-XX-XXX-10-009	5011-0	52
410-XX-XXX-10-001	1001-0	60
410-XX-XXX-10-002	1001-0	60
410-XX-XXX-41-001	1001-0	40
410-XX-XXX-41-001	1001-0	52
410-XX-XXX-41-105	1005-0	54
411-XX-XXX-41-001	0134-0	40
415-XX-XXX-41-001	0501-0	40
415-XX-XXX-41-003	0703-0	40
416-XX-XXX-41-001	0153-5	40
416-XX-XXX-41-003	0153-2	40
416-XX-XXX-41-006	0153-1	40
416-XX-XXX-41-007	0153-3	40
416-XX-XXX-41-008	0153-4	40
421-XX-XXX-41-001	0040-1	41
422-XX-XXX-41-001	0089-2	41
423-XX-XXX-41-001	0088-3	41
424-XX-XXX-41-002	0086-4	41
426-XX-XXX-41-001	2601-0	41
426-XX-XXX-41-002	2602-0	41
426-XX-XXX-41-003	2603-0	41
435-XX-XXX-00-160	3516-0	53
442-XX-XXX-00-591	4259-1	45
442-XX-XXX-00-592	4259-2	45
442-XX-XXX-00-593	4259-3	45
442-XX-XXX-00-594	4259-4	45
446-XX-XXX-41-012	4612-0	41
446-XX-XXX-41-013	4613-0	41
450-XX-XXX-00-001	0290-0	45
450-XX-XXX-00-006	3404-0	52
450-XX-XXX-01-106	3404-0	54
451-XX-XXX-00-003	5503-0	45
451-XX-XXX-00-004	5504-0	45
451-XX-XXX-00-005	5505-0	45
451-XX-XXX-00-009	5509-0	45
451-XX-XXX-00-010	5510-0	45
451-XX-XXX-00-011	5511-0	45
453-XX-XXX-00-001	5301-0	45
460-XX-XXX-00-001	0282-0	45
463-XX-XXX-00-001	1106-3	45
464-XX-XXX-00-580	6458-0	53
470-XX-XXX-00-001	0700-0	45
473-XX-XXX-00-001	0730-3	45
480-XX-XXX-00-001	8000-0	45
483-XX-XXX-00-001	8301-3	45
499-XX-XXX-10-003	1103/1602	52
499-XX-XXX-10-009	5011/5113	52
510-XX-113-01-681401	1001-0	60
510-XX-XXX-XX-XXXX0X	1001-0	66
511-XX-XXX-XX-XXXX0X	0134-0	66
514-XX-XXX-XX-XXX034	1434-0	72
515-XX-XXX-XX-XXXX0X	0501-0	66
517-XX-XXX-XX-XXXX06	1706-0	70
518-XX-XXX-XX-XXXX0X	180X-0	69
522-XX-XXX-XX-XXXX0X	0089-2	67
523-XX-XXX-XX-XXXX0X	0083-3	67
540-XX-XXX-17-400X0X	N/A	64
540-XX-XXX-24-000	N/A	63
551-XX-XXX-XX-XXXX03	5503-0	71
551-XX-XXX-XX-XXXX04	5504-0	71
551-XX-XXX-XX-XXXX05	5505-0	71
590-XX-168-17-105096	0498/1706	70
599-XX-XXX-XX-XXX476	9976-0	72
605-XX-XXX-11-480	0548-0	29
605-XX-XXX-XX-XXX048	0548-0	68
612-XX-XXX-41-001	0255-0	27
614-XX-XXX-31-007	1407-0	28
614-XX-XXX-31-012	0522-1	29
614-XX-XXX-31-018	0522-2	29
614-XX-XXX-41-001	1401-0	28
614-XX-XXX-XX-XXX00X	1401-0	68
614-XX-XXX-XX-XXX007	1407-0	68
614-XX-XXX-XX-XXX012	0522-1	68
712-XX-XXX-41-001	0255-0	42
714-XX-XXX-31-007	1407-0	42
714-XX-XXX-31-012	0552-1	42
714-XX-XXX-31-018	0552-2	42
714-XX-XXX-41-001	1401-0	42
800-XX-XXX-10-001	7007-0	55
800-XX-XXX-10-002	5016-0	56
800-XX-XXX-20-001	5005-0	55
800-XX-XXX-61-001	5601-0	57
800-XX-XXX-62-001	5602-0	57
801-XX-XXX-10-001	1304-0	55
801-XX-XXX-10-002	1303-0	56
801-XX-XXX-10-004	1313-0	56
801-XX-XXX-10-012	1303-0	56
801-XX-XXX-20-001	1305-0	55
801-XX-XXX-61-001	4614-0	57
801-XX-XXX-62-001	4615-0	57
802-XX-XXX-10-001	7007-0	55
802-XX-XXX-10-002	5016-0	56
802-XX-XXX-20-001	5005/5107	55
802-XX-XXX-61-001	5601-0	57
802-XX-XXX-62-001	5602-0	57
803-XX-XXX-10-001	1304-0	55
803-XX-XXX-10-002	1303-0	56
803-XX-XXX-10-004	1313-0	56
803-XX-XXX-20-001	1305/1306	55
803-XX-XXX-61-001	4614-0	57
803-XX-XXX-62-001	4615-0	57
830-XX-XXX-10-001	5012-0	50
830-XX-XXX-30-001	6218-0	51
831-XX-XXX-10-001	1802-0	50
831-XX-XXX-30-001	1802-0	51
832-XX-XXX-10-001	5012-0	50
832-XX-XXX-30-001	6218-0	51
833-XX-XXX-10-001	1802-0	50
833-XX-XXX-30-001	1802-0	51
850-XX-XXX-10-001	3006-0	47
850-XX-XXX-20-001	4006-1	48
850-XX-XXX-30-001	4006-0	49
851-XX-XXX-10-001	0489-0	47
851-XX-XXX-10-002	0467-0	47
851-XX-XXX-20-001	0489-1	48
851-XX-XXX-30-001	0489-0	49
852-XX-XXX-10-001	3006-0	47
852-XX-XXX-20-001	4006-1/2	48
852-XX-XXX-30-001	4006-0	49
853-XX-XXX-10-001	0489-0	47
853-XX-XXX-20-001	0489-1/2	48
853-XX-XXX-30-001	0489-0	49
8604-5450	N/A	4
890-XX-XXX-XX-XXX	N/A	58,59
892-XX-XXX-XX-XXX	N/A	58,59
917-XX-XXX-41-005	1705-0	62
999-11-XXX-XX	N/A	62
999-XX-X10-XX-000	N/A	58

INDEX

NUMERICAL LISTING AND LOCATION OF MILL-MAX PINS

PART #	PAGE
0038	115
0039	115
0040	115
0066	115
0067	115
0068	115
0086	115
0088	115
0089	115
0132	91
0133	91
0134	91
0135	91
0136	92
0137	92
0138	92
0139	92
0141	92
0144	93
0145	92
0146	92
0147	91
0148	92
0149	88
0152	92
0153	93
0156	91
0240	94
0252	90
0253	90
0255	91
0257	121
0259	129
0265	125
0270	125
0272	125
0273	100
0275	125
0279	102
0280	117
0281	117
0282	125
0284	100
0285	100
0286	129
0287	100
0290	124
0291	100
0292	98
0293	100
0294	98
0295	98
0297	98
0298	99
0300	102
0301	102
0303	100
0305	102
0306	100
0307	94
0309	102
0312	106
0314	106
0315	123
0316	106
0317	106
0318	133
0319	104
0322	105
0323	105
0324	105
0325	105
0326	99
0327	106
0328	106
0329	107
0330	102
0331	104
0333	106
0334	106
0335	103
0336	105
0338	97
0340	106
0341	90
0343	107
0344	105
0345	106
0347	107
0348	105
0349	105
0351	106
0354	108
0355	108
0356	107
0357	106
0358	107
0359	107
0360	107
0362	110
0363	110
0364	110
0365	110
0366	110
0367	110
0368	111
0370	112
0372	110
0373	106
0378	97
0381	110
0382	118
0383	118
0385	96
0387	112
0388	114
0389	114
0390	114
0391	112
0393	112
0394	112
0395	113
0396	99
0397	98
0398	98
0399	102
0400	103
0401	103
0405	105
0407	100
0415	100
0433	109
0434	109
0435	109
0436	109
0442	83
0444	116
0445	116
0446	116
0447	92
0461	84
0462	84
0463	84
0464	82
0466	84
0467	84
0468	87
0470	91
0477	88
0478	88
0489	84
0490	112
0491	112
0492	110
0493	112
0496	111
0498	94
0501	88
0504	122
0505	122
0508	119
0512	87
0520	131
0522	121
0529	82
0542	121
0548	83
0550	87
0552	83
0553	83
0554	83
0555	89
0556	92
0558	89
0560	83
0566	83
0569	83
0574	87
0579	84
0600	124
0613	84
0616	112
0660	89
0664	99
0665	89
0666	90
0667	89
0668	90
0669	90
0670	90
0671	87
0672	94
0673	90
0675	89
0676	90
0677	89
0678	90
0679	89
0680	88
0682	89
0697	90
0700	125
0703	87
0707	87
0730	135
0737	125
0814	107
0903	93
0904	93
0912	126
0915	121
0940	127
0952	121
0995	129
1001	91
1005	92
1010	132
1011	132
1012	132
1013	92
1020	132
1021	132
1022	132
1024	94
1030	115,133
1031	115,133
1032	115,133
1033	90
1034	115
1035	115
1036	115
1038	93
1040	115
1045	115
1047	116
1052	118
1053	118
1064	135
1065	89
1066	89
1067	121
1068	135
1070	135
1071	135
1072	135
1083	134
1090	134
1092	135
1093	135
1094	132
1095	133
1096	135
1097	133
1103	92
1104	94
1105	111
1106	135
1109	91
1110	132
1122	135
1124	132
1130	120
1147	86
1210	132
1212	133
1213	133
1214	133
1215	132
1216	133
1221	132
1222	132
1261	93
1267	120
1302	133
1303	102
1304	102
1305	103
1306	103
1313	104
1386	96
1401	89
1407	83
1434	88
1602	93
1610	93
1665	96
1702	115
1703	115
1705	94
1706	94
1707	94
1752	122
1753	94
1762	94
1782	96
1801	91
1802	95
1803	95
1804	95
1805	95
1806	95
1807	95
1808	95
1873	101
2086	85
2101	137
2102	136
2103	145
2104	145
2105	145
2106	145
2107	145
2108	136
2109	136
2110	137
2111	136
2112	145
2113	136
2115	150
2218	87
2297	117
2301	139
2302	147
2303	146
2304	140
2305	140
2306	140
2307	140
2308	138
2309	151
2310	139
2311	140
2312	138
2313	152
2314	148
2315	147
2316	137
2317	137
2318	151
2319	152
2320	146
2321	152
2322	146
2323	146
2324	136
2325	139
2326	150
2328	146
2329	138
2333	137
2348	139
2352	147
2355	139
2362	147
2365	139
2400	103
2501	142
2502	148
2503	140
2505	139
2506	139
2507	147
2508	141
2510	138
2511	148
2512	143
2513	138
2514	151
2515	148
2516	148
2517	146
2520	146
2524	141
2526	147
2530	152
2533	137
2551	141
2561	141
2601	116
2602	116
2603	116
2701	149
2702	142
2703	142
2704	140
2705	143
2706	152
2707	138
2708	137
2709	150
2710	142
2713	142
2715	149
2717	142
2762	149
2801	144
2802	144
2803	143
2804	144
2805	144
2806	144
2807	149
2808	149
2809	149
2810	141
2811	144
2812	141
2815	143
2816	143
2817	143
2821	137
3006	119
3016	85
3044	110
3061	86
3101	129
3102	129
3103	129
3104	129
3105	129
3106	129
3110	128
3111	128
3112	126
3113	127
3114	126
3115	126
3116	120
3117	126
3118	126
3119	126
3121	119
3122	129
3123	129
3124	129
3125	129
3126	129
3128	119
3129	120
3130	127
3131	126
3132	128
3133	131
3134	127
3135	120
3136	128
3137	128
3138	131
3139	126
3140	129
3141	129
3142	130
3144	131
3145	130
3146	130
3147	120
3148	128
3149	129
3150	128
3151	127
3152	131
3153	129
3154	121
3155	121
3156	130
3157	121
3158	121
3159	130
3210	120
3221	129
3222	129
3223	129
3230	130
3231	131
3232	130
3233	131
3301	127
3302	127
3303	127
3304	127
3360	127
3400	124
3401	124
3402	124
3403	122
3404	122
3405	124
3406	123
3407	123
3408	125
3409	123
3410	124
3411	124
3413	122
3450	104
3490	108
3516	122
3601	131
3602	126
3603	125
3609	131
3620	127
3621	127
3667	111
3808	108
4001	96
4006	119
4011	91
4034	110
4040	112
4259	122
4310	96
4366	120
4378	92
4526	129
4582	111
4612	88
4613	88
4614	103
4615	103
5005	124
5011	123
5012	119
5016	124
5059	107
5107	124
5113	123
5275	132
5295	99
5301	134
5435	120
5503	123
5504	123
5505	123
5509	123
5510	122
5511	122
5522	85
5531	85
5601	128
5602	128
5604	124
5650	101
5834	111
5960	96
5970	88
6002	97
6021	101
6023	85
6192	86
6218	119
6585	122
6659	107
6821	128
6857	103
7007	124
7009	97
7132	93
7405	104
7520	100
7553	86
7614	103
7827	120
8000	125
8067	111
8114	100
8131	94
8180	91
8252	93
8300	102
8301	134
8360	107
8401	103
8427	88
8433	109
8445	93
8467	86
8553	83
8600	130
8602	150
8607	91
8608	134
8637	86
8679	101
8685	119
8730	111
8815	128
9000	121
9016	112
9019	98
9081	119
9101	101
9214	112
9225	82
9234	92
9293	99
9324	110
9353	104
9354	104
9359	107
9372	111
9393	103
9401	111
9407	86
9548	85
9553	84
9970	88
9976	125

NEW PRODUCTS AND SERVICES FROM MILL-MAX

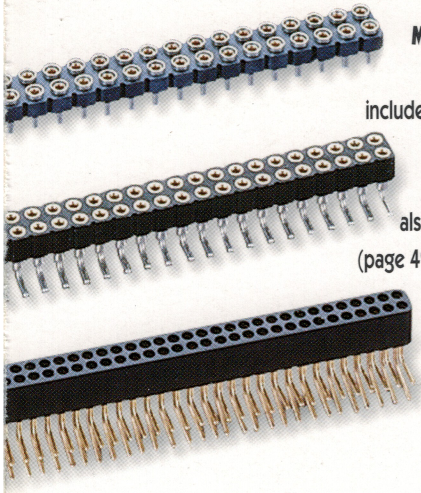

MILL-MAX has expanded its family of interconnects to include ultra low profile, thru hole SIPs (page 53). Surface mount interconnects have also been added in .050" grid (page 49), 2mm grid (page 51) and .100" grid (page 54). New right angle interconnects in .050" grid can be found on page 48.

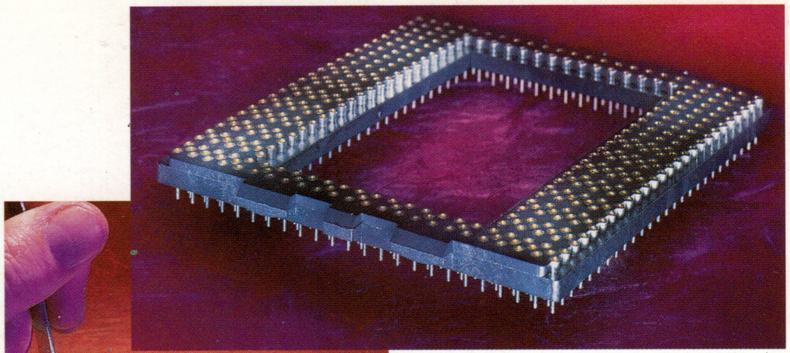

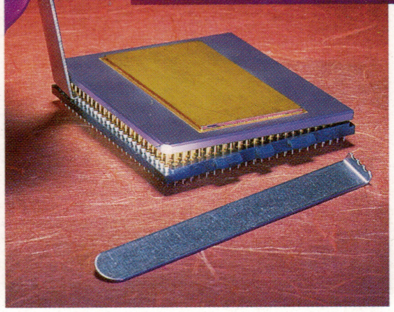

387 pin LIF socket for the Pentium Pro™ processor. "Ultra-lite" contacts permit easy hand insertion of the Pentium Pro™ processor, and a simple extraction tool is available. The socket has a .180" profile, heatsink tabs, and a solder tail length for .062" thick PWBs. Socket # 518-93-387-01-016508, Extraction tool # 828-01-010

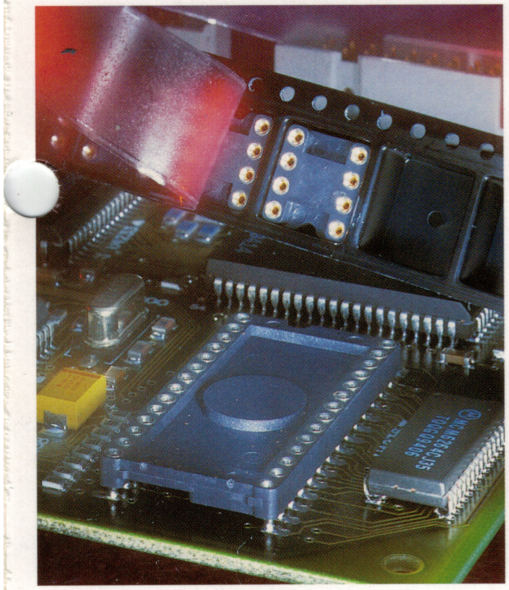

Surface mount DIP sockets are now available on tape per EIA standard 481. This facilitates their use on high speed pick and place equipment. Turn to page 22 for more information.

10 pin vertical display socket has a one piece Nylon-46 housing. The machined pins and BeCu contacts are both tin plated and provide secure retention of the display. Order as: 299-99-210-12-001800

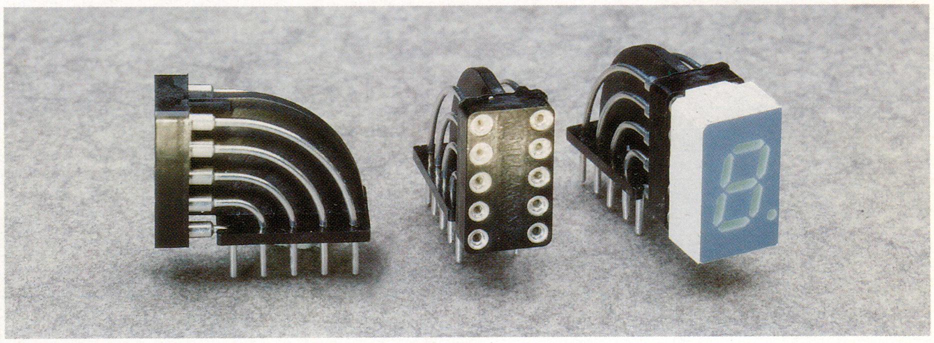

Mill-Max's engineering services recently helped a microsystems company when they found themselves in a bind; a critical component had become obsolete. Within days, Mill-Max fabricated a SMT header so that a substitute component could be adapted to match the original footprint. The customer was able to extend the life of the product and actually reduce production costs. ❶ "Floating" Pin SMT Headers using machined epoxy insulator ❷ Detail of "Floating" Pins which compensate for unevenly screened solder paste ❸ PQFP Device ❹ Translator Board ❺ Existing Motherboard

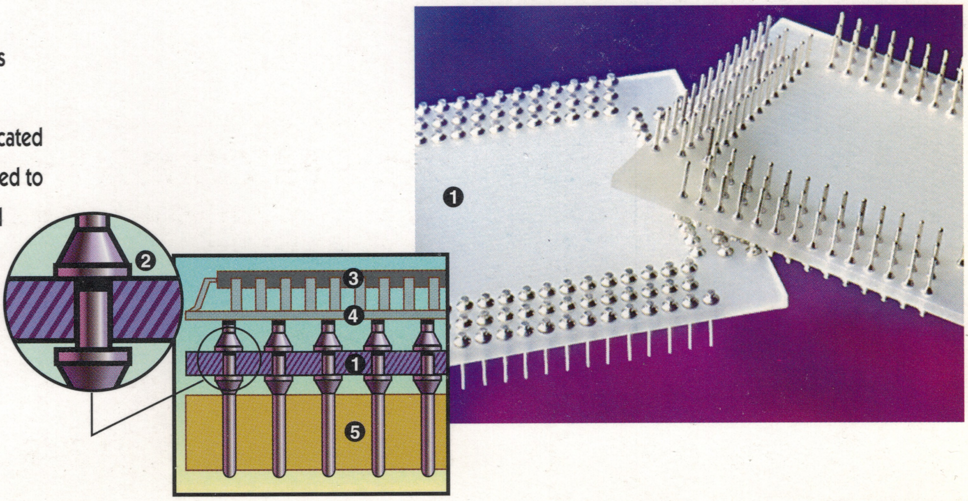

MILL-MAX MFG. CORP.

190 Pine Hollow Road, P.O. Box 300

Oyster Bay, New York 11771

516-922-6000 • Fax 516-922-9253

E-Mail: techserv@mill-max.com

Internet: http://www.mill-max.com